VICINITY MAP - 1"=2000'

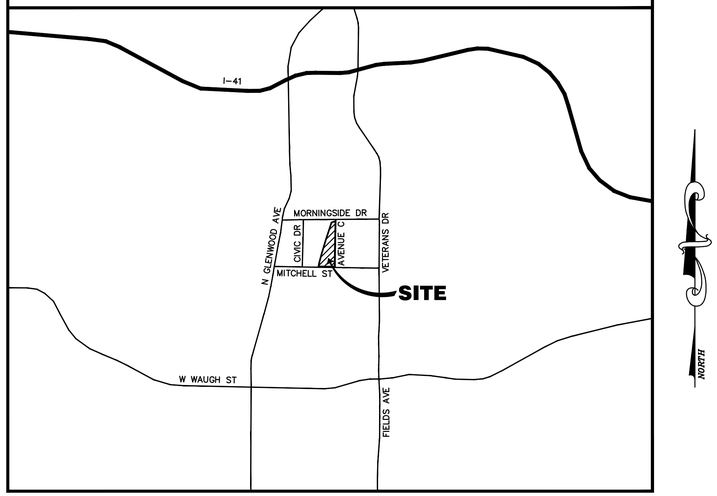

PROJECT CONTACTS

PRINCIPLE IN CHARGE:

ROBERT MACPHERSON, PE
PRIME ENGINEERING INC.
3715 NORTHSIDE PARKWAY NW
300 NORTHCREEK, SUITE 200
ATLANTA, GEORGIA 30327
404-425-7100 (OFFICE)
RMACPHERSON@PRIME-ENG.COM

PROJECT MANAGER/CIVIL ENGINEER:

KATIE STRICKLAND, PE
PRIME ENGINEERING INC.
3715 NORTHSIDE PARKWAY NW
300 NORTHCREEK, SUITE 200
ATLANTA, GEORGIA 30327
404-425-7100 (OFFICE)
KSTRICKLAND@PRIME-ENG.COM

OWNER/24-HOUR CONTACT:

P. ANDREW PARKER, P.E.
300 W. WAUGH ST
DALTON, GA 30722
706-529-2404
APARKER@DALTONGA.GOV

SURVEYOR:

CHRISTOPHER LEE LEWIS, PLS
LEWIS & ASSOCIATES LAND
SURVEYING, LLC
P.O. BOX 2046
DALTON, GA 30722
706-278-7518
INFO@LEWISSURVEY.COM

GEOTECH:

LUIS E. BABLER, P.E.
GEO-HYDRO ENGINEERS, INC.
1000 COBB PLACE BOULEVARD,
SUITE 290
KENNESAW, GEORGIA 30144
770-426-7100
KENNESAW@GEOHYDRO.COM

DALTON PICKLEBALL COMPLEX

904 CIVIC DR
DALTON, GEORGIA 30721

ISSUED FOR PERMIT
08/09/2024

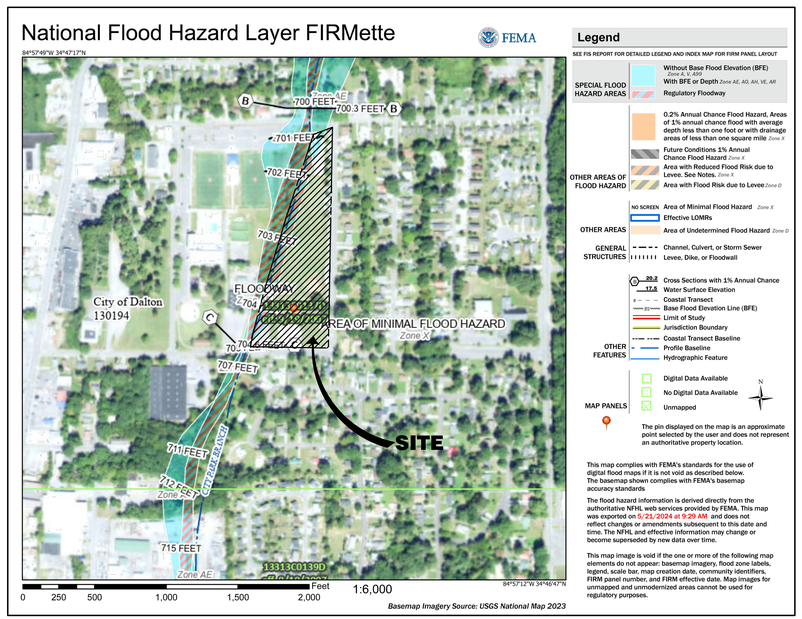

FIRM PANEL

SITE IS NOT LOCATED WITHIN A FEMA FLOOD HAZARD AREA. REFERENCE FIRM MAP NO. 13313C0137D DATED FOR 09/19/2007.

Name: KATIE STRICKLAND, PE — DATE: 07/16/2024 — GSWCC LEVEL 2 CERTIFICATION NO. 0000087240

GEORGIA811 www.Georgia811.com
Know what's below. Call before you dig.

NOTE:
EROSION CONTROL MEASURES WILL BE MAINTAINED AT ALL TIMES. IF FULL IMPLEMENTATION OF THE APPROVED PLANS DOES NOT PROVIDE FOR EFFECTIVE EROSION CONTROL, ADDITIONAL EROSION AND SEDIMENT CONTROL MEASURES SHALL BE IMPLEMENTED TO CONTROL OR TREAT THE SEDIMENT SOURCE.

THE ESCAPE OF SEDIMENT FROM THE SITE SHALL BE PREVENTED BY THE INSTALLATION OF EROSION CONTROL MEASURES AND PRACTICES PRIOR TO, OR CONCURRENT WITH, LAND DISTURBING ACTIVITIES.

ANY DISTURBED AREA LEFT EXPOSED FOR A PERIOD GREATER THAN 13 DAYS SHALL BE STABILIZED WITH MULCH OR TEMPORARY SEEDING.

ALL EROSION AND SEDIMENT CONTROLS, AND TREE PROTECTION MEASURES SHALL BE INSTALLED PRIOR TO GRADING.

DRAWN BY	SY
DESIGNED BY	KDS
CHECKED BY	KLK
DRAWING DATE	08/09/2024
DRAWING SCALE	AS SHOWN
PROJECT NUMBER	2024-0283
DRAWING NUMBER	G-000
DRAWING TITLE	COVER SHEET

PRIME
A Stratus Team Company

PROJECT NUMBER: 2024-0283
08/09/2024

DRAWING INDEX

		Sheet Number	Sheet Title
A	08/09/2024	G-000	COVER SHEET
A	08/09/2024	G-001	DRAWING INDEX
A	08/09/2024	G-002	GENERAL NOTES, ABBREVIATIONS, AND CIVIL LEGEND
A	08/09/2024	G-003	GEOTECH BORING MAP & BORING LOGS
A	08/09/2024	G-004	GEOTECH BORING LOGS
A	08/09/2024	C-101	EXISTING CONDITIONS AND DEMO PLAN
A	08/09/2024	C-201	STAKING AND LAYOUT PLAN
A	08/09/2024	C-202	GRADING AND DRAINAGE PLAN
A	08/09/2024	C-203	UTILITY PLAN
A	08/09/2024	C-301	STORM WATER PROFILES
A	08/09/2024	C-303	SANITARY SEWER & WALL PROFILES
A	08/09/2024	C-401	CONSTRUCTION DETAILS
A	08/09/2024	C-402	CONSTRUCTION DETAILS
A	08/09/2024	C-403	CONSTRUCTION DETAILS
A	08/09/2024	C-404	CONSTRUCTION DETAILS
A	08/09/2024	C-405	CONSTRUCTION DETAILS
A	08/09/2024	C-406	CONSTRUCTION DETAILS
A	08/09/2024	EC-001	ES&PC NOTES
A	08/09/2024	EC-002	ES&PC COMPREHENSIVE MONITORING PLAN
A	08/09/2024	EC-003	ES&PC PREMITTING NOTES
A	08/09/2024	EC-004	ES&PC CHECKLIST
A	08/09/2024	EC-201	INITIAL ES&PC PLAN
A	08/09/2024	EC-202	INTERMEDIATE ES&PC PLAN
A	08/09/2024	EC-203	FINAL ES&PC PLAN
A	08/09/2024	EC-401	ES&PC DETAILS
A	08/09/2024	EC-402	ES&PC DETAILS
A	08/09/2024	L-001	LANDSCAPE NOTES & PLANT SCHEDULE
A	08/09/2024	L-101	TREE PROTECTION PLAN
A	08/09/2024	L-201	LANDSCAPE PLAN
A	08/09/2024	L-401	LANDSCAPE DETAILS
A	08/09/2024	LI-201	IRRIGATION PLAN
A	08/09/2024	LI-401	IRRIGATION DETAILS
A	08/09/2024	LJ-201	HARDSCAPE PLAN
A	08/09/2024	LJ-401	HARDSCAPE DETAILS
A	08/09/2024	LJ-402	HARDSCAPE & PICKLEBALL COURT DETAILS
A	08/09/2024	LJ-403	PICKLEBALL COURT DETAILS
A	08/09/2024	LJ-404	PICKLEBALL COURT DETAILS
A	08/09/2024	A-001	LEGENDS, ABBREVIATION, AND NOTES
A	08/09/2024	A-002	LIFE SAFETY PLAN, CODE SUMMARY
A	08/09/2024	A-003	TYPICAL MOUNTING HEIGHTS
A	08/09/2024	A-101	PROPOSED FLOOR PLAN
A	08/09/2024	A-102	BUILDING REFLECTED CEILING PLAN
A	08/09/2024	A-103	BUILDING ROOF PLAN
A	08/09/2024	A-201	BUILDING ELEVATIONS
A	08/09/2024	A-202	BUILDING ELEVATIONS
A	08/09/2024	A-301	BUILDING SECTIONS
A	08/09/2024	A-401	INTERIOR ELEVATIONS
A	08/09/2024	A-501	DETAILS
A	08/09/2024	A-502	DETAILS
A	08/09/2024	A-601	SCHEDULES
A	08/09/2024	S-001	STRUCTURAL NOTES, ABBREVIATIONS, AND LEGEND
A	08/09/2024	S-101	FOUNDATION PLAN
A	08/09/2024	S-102	FRAMING PLAN
A	08/09/2024	S-201	SECTIONS
A	08/09/2024	S-301	SECTIONS
A	08/09/2024	S-401	ELEVATIONS
A	08/09/2024	S-501	SECTIONS AND DETAILS
A	08/09/2024	S-502	DETAILS
A	08/09/2024	S-600	COURT COVERING STRUCTURAL NOTES
A	08/09/2024	S-601	COURT BUILDING FOUNDATION PLAN
A	08/09/2024	E-000	NOTES, DETAILS, AND LEGEND
A	08/09/2024	E-001	ELECTRICAL RISER AND PANEL SCHEDULE
A	08/09/2024	E-101	SITE - ELECTRICAL PLAN
A	08/09/2024	E-102	SITE - PHOTOMETRICS PLAN
A	08/09/2024	E-201	POWER AND LIGHTING PLAN
A	08/09/2024	M-001	LEGEND, NOTES, DETAILS & SCHEDULES
A	08/09/2024	M-101	MECHANICAL PLAN
A	08/09/2024	P-001	LENGEND, NOTES, DETAILS & SCHEDULES
A	08/09/2024	P-101	PLUMBING FLOOR PLAN - SAN & VENT
A	08/09/2024	P-201	PLUMBING FLOOR PLAN - DOM WATER

LEGEND

INDICATES SHEET INCLUDED IN THIS ISSUE
REVISION NUMBER
LATEST ISSUE

1 G-001 **DRAWING INDEX**
SCALE: N.T.S.

PRIME
A Stratus Team Company
5715 NORTHSIDE PARKWAY NW
BUILDING 300, SUITE 200
ATLANTA, GEORGIA 30327
404-425-7100

PROJECT:
DALTON PICKLEBALL COMPLEX
904 CIVIC DR,
DALTON, GA 30721

PREPARED FOR:
CITY OF DALTON, GA

REVISIONS

NO.	DATE	DESCRIPTION

SEAL

GEORGIA REGISTERED No. PE044235 PROFESSIONAL ENGINEER KATHRYN D. KIRKPATRICK

DATE: 08/09/2024

© 2024 PRIME ENGINEERING, INC. Scales, as stated hereon, are valid on the original drawing; the dimensions of which are 24 by 36 inches. These scales, noted hereon, are hereby changed by the ratio of the overall sheet dimensions of the print to corresponding dimensions of the original drawing. This drawing is the property of PRIME ENGINEERING, INCORPORATED and is not to be reproduced or copied in whole or in part. It is only to be used for the project and site specifically identified hereth and is not to be used on any other project. It is to be returned upon request.

DRAWING TITLE
DRAWING INDEX

DRAWING DATE 08/09/2024	DRAWN BY SY	
DRAWING SCALE NOT TO SCALE	DESIGNED BY KDS	
PROJECT NUMBER 2024-0283	CHECKED BY KLK	
DRAWING NUMBER G-001		NOT ISSUED FOR CONSTRUCTION

R:\A-Z\City of Dalton, GA\2024-0283 Dalton-Pickleball Complex\3 ENGINEERING\Drawings\G-001 - SHEET INDEX - 2024-0283.dwg Thu, 08/08/24 10:53 AM

GENERAL NOTES

1. PROJECT: DALTON PICKLEBALL COMPLEX
   LAND LOTS 180, 12th DISTRICT
   WHITFIELD, GEORGIA
   ZONED: R-3
2. OWNER: CITY OF DALTON
   CONTACT: P. ANDREW PARKER, P.E.
   300 W. WAUGH ST
   PHONE: 706-529-2404
3. CIVIL ENGINEER: PRIME ENGINEERING, INC.
   CONTACT: KATIE STRICKLAND, PE
   3715 NORTHSIDE PKWY NW
   300 NORTHCREEK, SUITE 200
   ATLANTA, GA 30327
   404-425-7100 (OFFICE)
4. SURVEY: THE BOUNDARY & TOPOGRAPHIC SURVEY FOR THIS PROJECT WAS FURNISHED AND PREPARED BY LEWIS & ASSOCIATES SURVEYING, LLC.
5. PROJECT IS LOCATED IN PARCELS: 12-180-04. LAND LOT 180, OF THE 12th DISTRICT, CITY OF DALTON, WHITFIELD COUNTY, GEORGIA.
6. TOTAL ACREAGE OF THE SITE IS 8.13 AC. DISTURBED AREA ASSOCIATED WITH CONSTRUCTION IS 2.56 AC.
7. ALL CONSTRUCTION MUST CONFORM TO ANY FEDERAL, STATE, OR LOCAL CODES.
8. ALL MATERIALS AND CONSTRUCTION METHODS TO BE IN ACCORDANCE WITH CITY AND COUNTY STANDARDS, AS APPLICABLE.
9. CONTRACTOR SHALL BE RESPONSIBLE FOR OBTAINING ALL REQUIRED PERMITS AND LICENSES AND SHALL BE RESPONSIBLE FOR ALL FEES INVOLVED WITH OBTAINING PERMITS.
10. DIMENSIONS AND ELEVATIONS SHOULD BE FIELD VERIFIED BY THE CONTRACTOR PRIOR TO CONSTRUCTION.
11. SILT BARRIERS SHALL BE PLACED PRIOR TO GRADING. ALL EROSION CONTROL MEASURES SHALL BE MAINTAINED BY THE CONTRACTOR. ADDITIONAL EROSION CONTROL MEASURES SHALL BE INSTALLED IF DEEMED NECESSARY BY ON-SITE INSPECTION.
12. THE CONTRACTOR SHALL BE RESPONSIBLE FOR MAINTAINING A MARKED-UP SET OF DESIGN DRAWINGS SHOWING ALL "AS-BUILT" CONDITIONS. THESE "RECORD DRAWINGS" SHALL BE MADE AVAILABLE TO THE OWNER AND/OR THE COUNTY INSPECTOR UPON REQUEST. THE MARKUPS SHALL BE AT THE SITE AT ALL TIMES AND SHALL BE UTILIZED BY THE CONTRACTOR TO DEVELOP FINAL RECORD DRAWINGS.
13. CONTRACTOR IS RESPONSIBLE FOR PROVIDING RECORD DRAWINGS AND AS-BUILT CERTIFICATIONS TO THE ENGINEER FOR PROCESSING WHEN THE PROJECT IS COMPLETED.
14. THIS SITE CAN BE USED SAFELY AND FOR BUILDING PURPOSES WITHOUT UNDUE DANGER FROM FLOOD OR ADVERSE SOIL OR FOUNDATION CONDITIONS.
15. NO IMPACTS ON FLOOD PLAINS OR RIVERINE AREAS ARE ANTICIPATED.
16. NO IMPACTS TO GROUNDWATER AND SURFACE WATER ARE ANTICIPATED.
17. CONTRACTOR WILL FILE A NOTICE OF INTENT AT LEAST 14 DAYS PRIOR TO THE START OF CONSTRUCTION.
18. THE CONTRACTOR SHALL TELEPHONE TOLL FREE 1-800-282-7411 A MINIMUM OF 48 HOURS PRIOR TO THE START OF ANY EXCAVATION AS SHOWN AND NOTED ON THE PLANS FOR A UTILITY LOCATION SERVICE.
19. THE OWNER SHALL ENTER ALL NECESSARY CONTRACTS WITH THE DEPARTMENT OF PUBLIC UTILITIES FOR CONNECTIONS TO PUBLIC WATER AND SEWER.
20. THE DIRECTOR OF THE DEPARTMENT OF PUBLIC UTILITIES SHALL APPROVE THE PLAN OF DEVELOPMENT FOR CONSTRUCTION OF PUBLIC WATER AND SEWER, PRIOR TO BEGINNING ANY CONSTRUCTION OF THESE UTILITIES.
21. THE DEPARTMENT OF PUBLIC UTILITIES SHALL BE NOTIFIED AT LEAST 24 HOURS PRIOR TO ANY COUNTY WATER AND SEWER CONSTRUCTION. A SET OF PLANS SHALL BE AVAILABLE FOR PUBLIC WORKS, PUBLIC UTILITIES AND SECRETARY OF THE PLANNING COMMISSION AT ALL TIMES WHEN WORK IS BEING PERFORMED. A DESIGNATED RESPONSIBLE EMPLOYEE SHALL BE AVAILABLE FOR CONTACT BY COUNTY INSPECTORS.
22. STUMPS AND CONSTRUCTION DEBRIS SHALL BE DEPOSITED IN A PROPERLY PERMITTED LANDFILL LOCATED OFF-SITE. NO BURY PITS ARE ALLOWED ON THIS SITE.
23. NO ASBESTOS, HAZARDOUS WASTE OR OTHER HAZARDOUS MATERIALS ARE KNOWN TO EXIST ON THIS SITE. SHOULD ASBESTOS, HAZARDOUS WASTE OR OTHER HAZARDOUS MATERIAL BE ENCOUNTERED DURING THE COURSE OF THIS WORK, IMMEDIATELY NOTIFY THE OWNER WHERE APPROPRIATE ACTIONS AND SAFEGUARDS MAY BE IMPLEMENTED.

STRUCTURAL LAYOUT POINTS

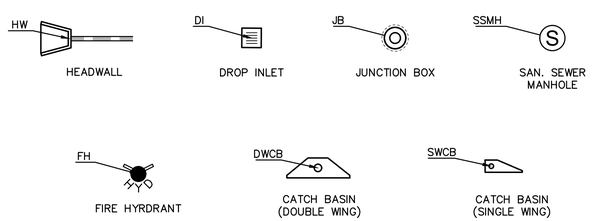

ABBREVIATIONS

AC	ACRES
AGGR	AGGREGATE
ASPH	ASPHALT
AVE	AVERAGE
CB	CATCH BASIN
℄	CENTERLINE
CF	CUBIC FEET
CO	CLEAN OUT
CONC	CONCRETE
CMP	CORRUGATED METAL PIPE
DBH	DIAMETER AT BREAST HEIGHT
DIA	DIAMETER
DI	DROP INLET
DIP	DUCTILE IRON PIPE
DWCB	DOUBLE WING CATCH BASIN
E	ELECTRICAL
EMER	EMERGENCY
EOP	EDGE OF PAVEMENT
ELEV	ELEVATION
EQUIP	EQUIPMENT
EXIST	EXISTING
FFE	FINISH FLOOR
FIN	FINISHED
FH	FIRE HYDRANT
FT	FEET
FW	FIRE WATER
G	NATURAL GAS
GI	GRATE INLET
GV	GATE VALVE
GM	GAS METER
HW	HEADWALL
ID	INSIDE DIAMETER
IE	INVERT ELEVATION
IN	INCHES
IPF	IRON PIN FOUND
IPS	IRON PIN SET
IRRIG	IRRIGATION
JB	JUNCTION BOX
LF	LINEAR FEET
LP	LIGHT POLE
MIN	MINIMUM
MH	MANHOLE
N/A	NOT APPLICABLE
N/F	NOW OR FORMERLY
NIC	NOT IN CONTRACT
NTS	NOT TO SCALE
OC	ON CENTER
O.D.	OUTSIDE DIAMETER
O.F.	OVER FLOW
PIV	POST INDICATOR VALVE
PVC	POLY VINYL CHLORIDE
R	RADIUS
RCP	REINFORCED CONCRETE PIPE
R/W	RIGHT OF WAY
REQ'D	REQUIRED
SSMH	SANITARY SEWER MANHOLE
SWCB	SINGLE WING CATCH BASIN
T	TELEPHONE
TE	TOP ELEVATION
TW	TOP OF WALL ELEVATION
TYP	TYPICAL
UND	UNDER DRAIN
UNO	UNLESS NOTED OTHERWISE
W	DOMESTIC WATER
W/	WITH

DETAIL IDENTIFICATION

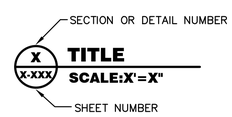

LEGEND

	EXISTING	PROPOSED
ASPHALT (LIGHT DUTY)		
ASPHALT (HEAVY DUTY)		
BENCHMARK	BM	N/A
BOLLARD	BO	
BUILDING		
CABLE TV PEDESTAL	CA	CA
CENTERLINE		
STANDARD DUTY CONCRETE		
HEAVY DUTY CONCRETE		
CONCRETE POROUS		
CONCRETE MONUMENT		N/A
CONTOURS (MAJOR)	1000	1000
CONTOURS (MINOR)	1002	1002
CURB INLET		
DEMOLITION (AREA)	N/A	

LEGEND CONTINUED

	EXISTING	PROPOSED
DEMOLITION (LINEAR)	N/A	
DROP INLET		
EARTH		
ELECTRIC BOX	EB	N/A
FENCE	X X	X X
FIBER OPTIC LINE	FO FO	FO FO
FIRE DEPARTMENT CONNECTION		
FIRE HYDRANT		
FIRE LINE	F F	F F
FLARED END SECTION		
GAS LINE	G G	G G
GRAVEL		
GUY WIRE		
HANDICAP SYMBOL		
HOSE BIBB	HB	HB
IRON PIN FOUND		N/A
JUNCTION BOX / MANHOLE		
LIGHT POLE		
LIMITS	N/A	
OVERHEAD CABLE TV	C C	C C
OUTLET CONTROL STRUCTURE		
OVERHEAD ELECTRIC	OE OE	OE OE
OVERHEAD TELEPHONE	T T	T T
PAVEMENT ARROW (STRAIGHT)		
PAVEMENT ARROW (LEFT TURN ONLY)		
PAVEMENT ARROW (RIGHT TURN ONLY)		
PAVEMENT ARROW (LEFT TURN/STRAIGHT)		
PLUGGED (OR CAPPED) LINE		
PROPERTY LINE		
REDUCER		
SANITARY SEWER	S S	S S
SANITARY SEWER MANHOLE	S	S
SEWER CLEAN OUT	CO	CO
SIGN (ONE POST)		
SIGN (TWO POST)		
SILT FENCE	N/A	
SLOPE ARROW		
SOIL BORING		N/A
SPOT ELEVATION	1000.0 BM	1000.0 BM
STAIRS & LANDING		
STORM SEWER		
THRUST BLOCK		
TRANSFORMER	T	T
UNDERGROUND CABLE TV	UC	UC
UNDERGROUND ELECTRIC	UE	UE
UNDERGROUND TELEPHONE	UT	UT
UTILITY POLE		
WATER LINE	W W	W W
WATER METER	WM	WM
VALVE (GENERAL)		
VALVE (POST INDICATOR)	PIV	PIV
WHEEL STOP		

PRIME
A Stratus Team Company
3715 NORTHSIDE PARKWAY NW
BUILDING 300, SUITE 200
ATLANTA, GEORGIA 30327
404-425-7100

PROJECT:
DALTON PICKLEBALL COMPLEX
904 CIVIC DR,
DALTON, GA 30721
PREPARED FOR:
CITY OF DALTON, GA

REVISIONS

NO.	DATE	DESCRIPTION

SEAL

GEORGIA REGISTERED No. PE044235 PROFESSIONAL ENGINEER KATHRYN D. STRICKLAND

DATE: 08/09/2024

© 2024 PRIME ENGINEERING, INC. Scales, as stated hereon, are valid on the original drawing; the dimensions of which are 24 by 36 inches. These scales, noted hereon, are hereby changed by the ratio of the current plot dimensions of the print to corresponding dimensions of the original drawing. This drawing is the property of PRIME ENGINEERING, INCORPORATED and is not to be reproduced or copied in whole or in part. It is only to be used for the project and site specifically identified herein and is not to be used on any other project. It is to be returned upon request.

DRAWING TITLE
GENERAL NOTES, ABBREVIATIONS, AND CIVIL LEGEND

DRAWING DATE 08/09/2024	DRAWN BY SY		
DRAWING SCALE NOT TO SCALE	DESIGNED BY KDS		
PROJECT NUMBER 2024-0283	CHECKED BY KJK		
DRAWING NUMBER G-002			

NOT ISSUED FOR CONSTRUCTION

R:\A-Z\City of Dalton, GA\2024-0283 Dalton-Pickleball Complex\3 ENGINEERING\Drawings\G-002 - GENERAL NOTES, ABBREVIATIONS, AND CIVIL LEGEND - 2024-0283.dwg Thu, 08/08/24 10:53 AM

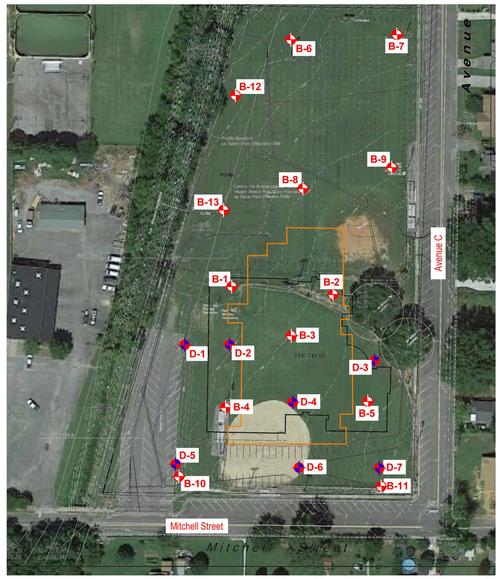

Figure 2: Boring Location Plan

New Aquatic Center
John Davis Recreation Center
Dalton, Georgia
Geo-Hydro Project Number 211941.20

Symbols and Nomenclature

Symbols

	Thin-walled tube (TWT) sample recovered
	Thin-walled tube (TWT) sample not recovered
●	Standard penetration resistance (ASTM D1586)
50/2"	Number of blows (50) to drive the split-spoon a number of inches (2)
65%	Percentage of rock core recovered
RQD	Rock quality designation - % of recovered core sample which is 4 or more inches long
GW	Groundwater
▼	Water level at least 24 hours after drilling
▽	Water level one hour or less after drilling
ALLUV	Alluvium
TOP	Topsoil
PM	Pavement Materials
CONC	Concrete
FILL	Fill Material
RES	Residual Soil
PWR	Partially Weathered Rock
SPT	Standard Penetration Testing

Penetration Resistance Results

	Number of Blows, N	Approximate Relative Density
Sands	0-4	very loose
	5-10	loose
	11-20	firm
	21-30	very firm
	31-50	dense
	Over 50	very dense

	Number of Blows, N	Approximate Consistency
Silts and Clays	0-1	very soft
	2-4	soft
	5-8	firm
	9-15	stiff
	16-30	very stiff
	31-50	hard
	Over 50	very hard

Drilling Procedures

Soil sampling and standard penetration testing performed in accordance with ASTM D 1586. The standard penetration resistance is the number of blows of a 140-pound hammer falling 30 inches to drive a 2-inch O.D., 1-4-inch I.D. split-spoon sampler one foot. Rock coring is performed in accordance with ASTM D 2113. Thin-walled tube sampling is performed in accordance with ASTM D 1587.

D-1 Test Boring Record

Project: New Aquatic Center - John Davis Recreation Center		Project No: 211941.20	
Location: Dalton Georgia		Date: 1/5/22	
Method: HSA- ASTM D1586	GWT at Drilling: 9 feet	G.S. Elev: 708	
Driller: FD (Auto Hammer)	GWT at 24 hrs: N/A (Boring Backfilled)	Logged By: BGS	

Elev (Ft)	Depth (Ft)	GWT	Symbol	Description	N
				Topsoil (Approximately 3 inches)	
			SC	Firm to stiff tan and gray silty clay (CL) (RESIDUUM)	6, 9
				Firm tan-brown silty clay (CL) with rock fragments	6
				Firm tan and gray silty clay (CH)	5
				Very stiff to hard dark gray and brown clayey silt (ML) with rock fragments	32, 35, 29, 27
				Boring Terminated at 30 feet	

Remarks:

D-2 Test Boring Record

Project: New Aquatic Center - John Davis Recreation Center		Project No: 211941.20	
Location: Dalton Georgia		Date: 1/5/22	
Method: HSA- ASTM D1586	GWT at Drilling: 18 feet	G.S. Elev: 711	
Driller: FD (Auto Hammer)	GWT at 24 hrs: N/A (Boring Backfilled)	Logged By: BGS	

Elev (Ft)	Depth (Ft)	GWT	Symbol	Description	N
				Topsoil (Approximately 3 inches)	
			SC	Firm light brown silty clay (CH) (RESIDUUM)	6, 6
				Stiff to very stiff light gray and tan silty clay (CL)	13, 16
				Very stiff to hard dark brown clayey silt (ML) with rock fragment	35, 21, 18, 32
				Boring Terminated at 30 feet	

Remarks:

D-3 Test Boring Record

Project: New Aquatic Center - John Davis Recreation Center		Project No: 211941.20	
Location: Dalton Georgia		Date: 1/5/22	
Method: HSA- ASTM D1586	GWT at Drilling: 19 feet	G.S. Elev: 713	
Driller: FD (Auto Hammer)	GWT at 24 hrs: N/A (Boring Backfilled)	Logged By: BGS	

Elev (Ft)	Depth (Ft)	GWT	Symbol	Description	N
				Topsoil (Approximately 3 inches)	
				Very stiff to hard light brown clayey silt (ML) (RESIDUUM)	24, 34, 39, 16
			SC	Firm dark brown clayey fine sand (SC)	21, 19
				Very stiff to hard light brown clayey silt (ML)	29, 48
				Boring Terminated at 30 feet	

Remarks:

D-4 Test Boring Record

Project: New Aquatic Center - John Davis Recreation Center		Project No: 211941.20	
Location: Dalton Georgia		Date: 1/5/22	
Method: HSA- ASTM D1586	GWT at Drilling: 15 feet	G.S. Elev: 712	
Driller: FD (Auto Hammer)	GWT at 24 hrs: N/A (Boring Backfilled)	Logged By: BGS	

Elev (Ft)	Depth (Ft)	GWT	Symbol	Description	N
				Topsoil (Approximately 3 inches)	
				Firm tan and red silty clay (CL) (FILL)	7, 11
			SC	Firm to stiff red-brown fine to coarse sandy clay (CL) (RESIDUUM)	7, 7
				Very firm light brown silty fine to coarse sand (SM) with rock fragments	21
				Loose to firm dark brown clayey fine to coarse sand (SC) with rock fragments	8, 9, 12
				Boring Terminated at 30 feet	

Remarks:

D-5 Test Boring Record

Project: New Aquatic Center - John Davis Recreation Center		Project No: 211941.20	
Location: Dalton Georgia		Date: 1/5/22	
Method: HSA- ASTM D1586	GWT at Drilling: 13 feet	G.S. Elev: 708	
Driller: FD (Auto Hammer)	GWT at 24 hrs: N/A (Boring Backfilled)	Logged By: BGS	

Elev (Ft)	Depth (Ft)	GWT	Symbol	Description	N
				Topsoil (Approximately 3 inches)	
				Stiff light brown silty clay (CL) (RESIDUUM)	10, 14
			SC	Firm to stiff brown and gray silty clay (CL) with rock fragments	8, 10
				Firm light brown clayey fine to coarse sand (SC) with rock fragments	16, 14, 11, 15
				Boring Terminated at 30 feet	

Remarks:

D-6 Test Boring Record

Project: New Aquatic Center - John Davis Recreation Center		Project No: 211941.20	
Location: Dalton Georgia		Date: 1/5/22	
Method: HSA- ASTM D1586	GWT at Drilling: 19 feet	G.S. Elev: 713	
Driller: FD (Auto Hammer)	GWT at 24 hrs: N/A (Boring Backfilled)	Logged By: BGS	

Elev (Ft)	Depth (Ft)	GWT	Symbol	Description	N
				Very stiff brown-gray and red clayey silt (ML) (RESIDUUM)	18, 22
			SC	Firm light brown clayey fine to coarse sand (SC) with rock fragment	19
				Stiff dark brown and red fine to coarse sandy clay (CL) with rock fragments	10
				Firm light brown silty fine to coarse sand (SM) with rock fragments	20, 20
				Dense light brown silty fine to coarse sand (SM) with rock fragments	33, 40
				Boring Terminated at 30 feet	

Remarks:

D-7 Test Boring Record

Project: New Aquatic Center - John Davis Recreation Center		Project No: 211941.20	
Location: Dalton Georgia		Date: 1/5/22	
Method: HSA- ASTM D1586	GWT at Drilling: 19 feet	G.S. Elev: 714	
Driller: FD (Auto Hammer)	GWT at 24 hrs: N/A (Boring Backfilled)	Logged By: BGS	

Elev (Ft)	Depth (Ft)	GWT	Symbol	Description	N
				Topsoil (Approximately 3 inches)	
			SC	Firm light brown silty fine to coarse sand (SM) with rock fragments (RESIDUUM)	17, 20, 16
				Very stiff light brown silty clay (CL)	17
				Very firm to dense light brown silty fine to coarse sand (SC) with rock fragments	23, 35, 21, 24
				Boring Terminated at 30 feet	

Remarks:

GEORGIA811
www.Georgia811.com
Know what's below. Call before you dig.

1 G-003 GEOTECH BORING MAP & BORING LOGS
SCALE: AS NOTED

PRIME A Stratus Team Company
5715 NORTHSIDE PARKWAY NW
BUILDING 300, SUITE 200
ATLANTA, GEORGIA 30327
404-425-7100

PROJECT:
DALTON PICKLEBALL COMPLEX
904 CIVIC DR,
DALTON, GA 30721

PREPARED FOR:
CITY OF DALTON, GA

REVISIONS

NO.	DATE	DESCRIPTION

SEAL
GEORGIA REGISTERED No. PG044235 PROFESSIONAL ENGINEER KATHRYN N. KIRKPATRICK
DATE: 08/09/2024

© 2024 PRIME ENGINEERING, INC. Scales, as stated hereon, are valid on the original drawing; the dimensions of which are 24 by 36 inches. These scales, noted hereon, are hereby changed by the ratio of the overall sheet dimensions of the print to corresponding dimensions of the original drawing. This drawing is the property of PRIME ENGINEERING, INCORPORATED and is not to be reproduced or copied in whole or in part. It is only to be used for the project and site specifically identified herein and is not to be used on any other project. It is to be returned upon request.

DRAWING TITLE
GEOTECH BORING MAP & BORING LOGS

DRAWING DATE 08/09/2024	DRAWN BY SY	DESIGNED BY KDS	CHECKED BY KLK
DRAWING SCALE AS NOTED	PROJECT NUMBER 2024-0283	DRAWING NUMBER G-003	NOT ISSUED FOR CONSTRUCTION

R:\A-Z\City of Dalton, GA\2024-0283 Dalton-Pickleball Complex\3 ENGINEERING\Drawings\G-003 - GEOTECH BORING MAP - 2024-0283.dwg Thu, 08/08/24 10:53 AM

2020 TEST BORING RECORDS

GEO HYDRO ENGINEERS

B-1 Test Boring Record

Project: John H. Davis Recreation Center		Project No: 200038.20	
Location: Avenue C - Dalton, Georgia		Date: 1/10/20	
Method: HSA- ASTM D1586	GWT at Drilling: 16 feet	G.S. Elev: 710	
Driller: GCD - Rope & Cathead	GWT at 24 hrs: N/A (Boring Backfilled)	Logged By: AMP	

Description	N
Topsoil (Approximately 2 inches)	
Stiff dark brown silty clay (CL) (FILL)	9
Very stiff to hard tan and gray silty clay (CL) (RESIDUUM)	21, 28, 40
Hard dark brown silty clay (CH)	46, 50
Partially weathered rock - no sample recovered at 25 feet	50/1"
Auger Refusal at 27 feet	

Remarks:

B-2 Test Boring Record

Project: John H. Davis Recreation Center		Project No: 200038.20	
Location: Avenue C - Dalton, Georgia		Date: 1/10/20	
Method: HSA- ASTM D1586	GWT at Drilling: 16 feet	G.S. Elev: 712	
Driller: GCD - Rope & Cathead	GWT at 24 hrs: N/A (Boring Backfilled)	Logged By: AMP	

Description	N
Topsoil (Approximately 2 inches)	
Stiff tan silty clay (CL) (FILL)	9
Very stiff tan and red silty clay (CL)	25
Very stiff to hard tan and black clayey silt (ML)	35, 39, 21, 22, 24
Partially weathered rock sampled as brown clayey silt (ML)	50/4"
Boring Terminated at 30 feet	

Remarks:

B-3 Test Boring Record

Project: John H. Davis Recreation Center		Project No: 200038.20	
Location: Avenue C - Dalton, Georgia		Date: 1/10/20	
Method: HSA- ASTM D1586	GWT at Drilling: 15 feet	G.S. Elev: 712	
Driller: GCD - Rope & Cathead	GWT at 24 hrs: N/A (Boring Backfilled)	Logged By: AMP	

Description	N
Topsoil (Approximately 2 inches)	
Stiff tan and dark gray silty clay (CL) (FILL)	9
Very stiff to hard red and tan to black and tan clayey silt (ML) (RESIDUUM)	31, 26, 23, 21, 27, 27
Partially weathered rock sampled as dark brown silty clay (CL)	50/5"
Boring Terminated at 30 feet	

Remarks:

B-4 Test Boring Record

Project: John H. Davis Recreation Center		Project No: 200038.20	
Location: Avenue C - Dalton, Georgia		Date: 1/10/20	
Method: HSA- ASTM D1586	GWT at Drilling: 19 feet	G.S. Elev: 712	
Driller: GCD - Rope & Cathead	GWT at 24 hrs: N/A (Boring Backfilled)	Logged By: AMP	

Description	N
Topsoil (Approximately 3 inches)	
Stiff tan silty clay (CL) (FILL)	9
Very stiff to hard silty clay (CL) (RESIDUUM)	27, 28, 31, 44
Hard dark brown clayey silt (ML) with rock fragments	48
Partially weathered rock - no sample recovered at 25 feet	50/2"
Auger Refusal at 28 feet	

Remarks:

B-5 Test Boring Record

Project: John H. Davis Recreation Center		Project No: 200038.20	
Location: Avenue C - Dalton, Georgia		Date: 1/10/20	
Method: HSA- ASTM D1586	GWT at Drilling: 12 feet	G.S. Elev: 714	
Driller: GCD - Rope & Cathead	GWT at 24 hrs: N/A (Boring Backfilled)	Logged By: AMP	

Description	N
Topsoil (Approximately 2 inches)	
Stiff tan to red and gray silty clay (CL) (FILL)	11
Very stiff to hard dark brown and tan clayey silt (ML) (RESIDUUM)	31, 21, 23, 42, 30, 26
Partially weathered rock - no sample recovered at 30 feet	50/1"
Boring Terminated at 30 feet	

Remarks:

B-6 Test Boring Record

Project: John H. Davis Recreation Center		Project No: 200038.20	
Location: Avenue C - Dalton, Georgia		Date: 1/10/20	
Method: HSA- ASTM D1586	GWT at Drilling: Not Encountered	G.S. Elev: 708	
Driller: GCD - Rope & Cathead	GWT at 24 hrs: N/A (Boring Backfilled)	Logged By: AMP	

Description	N
Topsoil (Approximately 3 inches)	
Stiff tan silty clay (CL) (FILL)	10
Very stiff purple-brown silty clay (CL) with rock fragments (FILL)	22
Very stiff purple-brown silty clay (CL) with rotten wood (FILL)	16
Very stiff to hard tan and brown clayey silt (ML)	24, 41
Boring Terminated at 15 feet	

Remarks:

B-7 Test Boring Record

Project: John H. Davis Recreation Center		Project No: 200038.20	
Location: Avenue C - Dalton, Georgia		Date: 1/10/20	
Method: HSA- ASTM D1586	GWT at Drilling: Not Encountered	G.S. Elev: 710	
Driller: GCD - Rope & Cathead	GWT at 24 hrs: N/A (Boring Backfilled)	Logged By: AMP	

Description	N
Topsoil (Approximately 3 inches)	
Stiff purple-brown silty clay (CL) (FILL)	9
Hard tan to dark brown clayey silt (ML) (RESIDUUM)	31, 32, 40, 48
Boring Terminated at 15 feet	

Remarks:

B-8 Test Boring Record

Project: John H. Davis Recreation Center		Project No: 200038.20	
Location: Avenue C - Dalton, Georgia		Date: 1/10/20	
Method: HSA- ASTM D1586	GWT at Drilling: Not Encountered	G.S. Elev: 710	
Driller: GCD - Rope & Cathead	GWT at 24 hrs: N/A (Boring Backfilled)	Logged By: AMP	

Description	N
Topsoil (Approximately 2 inches)	
Stiff purple-brown silty clay (CL) (FILL)	10
Very stiff red and tan to tan and gray silty clay (CL) (RESIDUUM)	23, 23, 24
Very hard dark brown and black clayey silt (ML)	52
Boring Terminated at 15 feet	

Remarks:

B-9 Test Boring Record

Project: John H. Davis Recreation Center		Project No: 200038.20	
Location: Avenue C - Dalton, Georgia		Date: 1/10/20	
Method: HSA- ASTM D1586	GWT at Drilling: Not Encountered	G.S. Elev: 712	
Driller: GCD - Rope & Cathead	GWT at 24 hrs: N/A (Boring Backfilled)	Logged By: AMP	

Description	N
Topsoil (Approximately 2 inches)	
Very stiff to hard tan to dark brown clayey silt (ML)	18, 31, 20, 20, 21
Boring Terminated at 15 feet	

Remarks:

B-10 Test Boring Record

Project: John H. Davis Recreation Center		Project No: 200038.20	
Location: Avenue C - Dalton, Georgia		Date: 1/10/20	
Method: HSA- ASTM D1586	GWT at Drilling: Not Encountered	G.S. Elev: 711	
Driller: GCD - Rope & Cathead	GWT at 24 hrs: N/A (Boring Backfilled)	Logged By: AMP	

Description	N
Topsoil (Approximately 2 inches)	
Soft tan silty clay (CL) (FILL)	9
Very stiff to hard tan to gray silty clay (CL) (RESIDUUM)	17, 31, 37, 40
Boring Terminated at 15 feet	

Remarks:

B-11 Test Boring Record

Project: John H. Davis Recreation Center		Project No: 200038.20	
Location: Avenue C - Dalton, Georgia		Date: 1/10/20	
Method: HSA- ASTM D1586	GWT at Drilling: Not Encountered	G.S. Elev: 715	
Driller: GCD - Rope & Cathead	GWT at 24 hrs: N/A (Boring Backfilled)	Logged By: AMP	

Description	N
Topsoil (Approximately 2 inches)	
Stiff red and brown clayey silt (ML) (FILL)	15
Hard to very hard tan to brown clayey silt (ML)	45, 41, 43, 51
Boring Terminated at 15 feet	

Remarks:

B-12 Test Boring Record

Project: John H. Davis Recreation Center		Project No: 200038.20	
Location: Avenue C - Dalton, Georgia		Date: 1/10/20	
Method: HSA- ASTM D1586	GWT at Drilling: Not Encountered	G.S. Elev: 708	
Driller: GCD - Rope & Cathead	GWT at 24 hrs: N/A (Boring Backfilled)	Logged By: AMP	

Description	N
Topsoil (Approximately 2 inches)	
Stiff to very stiff orange-brown to gray-tan silty clay (CL) (FILL)	10, 23, 15, 23
Hard gray and tan silty clay (CL) (RESIDUUM)	40
Boring Terminated at 15 feet	

Remarks:

B-13 Test Boring Record

Project: John H. Davis Recreation Center		Project No: 200038.20	
Location: Avenue C - Dalton, Georgia		Date: 1/10/20	
Method: HSA- ASTM D1586	GWT at Drilling: Not Encountered	G.S. Elev: 709	
Driller: GCD - Rope & Cathead	GWT at 24 hrs: N/A (Boring Backfilled)	Logged By: AMP	

Description	N
Topsoil (Approximately 3 inches)	
Stiff dark brown silty clay (CL) (FILL)	9
Very stiff purple-brown silty clay (CL) (FILL)	21
Dark purple silty clay (CL) with rock fragments (FILL) *	22, 50/1"
Hard dark brown clayey silt (ML) (RESIDUUM)	40
Boring Terminated at 15 feet	

Remarks: *Standard penetration resistance not considered representative due to rock fragments in the fill

1 GEOTECH BORING LOGS
G-004
SCALE: NOT TO SCALE

PRIME
A Stratus Team Company
3715 NORTHSIDE PARKWAY NW
BUILDING 300, SUITE 200
ATLANTA, GEORGIA 30327
404-425-7100

PROJECT:
DALTON PICKLEBALL COMPLEX
904 CIVIC DR,
DALTON, GA 30721
PREPARED FOR:
CITY OF DALTON, GA

REVISIONS

NO.	DATE	DESCRIPTION

SEAL
GEORGIA REGISTERED PROFESSIONAL ENGINEER No. PE044235 KATHRYN D. STRICKLAND
DATE: 08/09/2024

© 2024 PRIME ENGINEERING, INC. Scales, as stated hereon, are valid on the original drawing; the dimensions of which are 24 by 36 inches. These scales, noted hereon, are hereby changed by the ratio of the overall sheet dimensions of the print to corresponding dimensions of the original drawing. This drawing is the property of PRIME ENGINEERING, INCORPORATED and is not to be reproduced or copied in whole or in part. It is only to be used for the project and site specifically identified herein and is not to be used on any other project. It is to be returned upon request.

DRAWING TITLE
GEOTECH BORING LOGS

DRAWING DATE 08/09/2024	DRAWN BY SY
DRAWING SCALE NOT TO SCALE	DESIGNED BY KDS
PROJECT NUMBER 2024-0283	CHECKED BY KLK
DRAWING NUMBER G-004	

NOT ISSUED FOR CONSTRUCTION

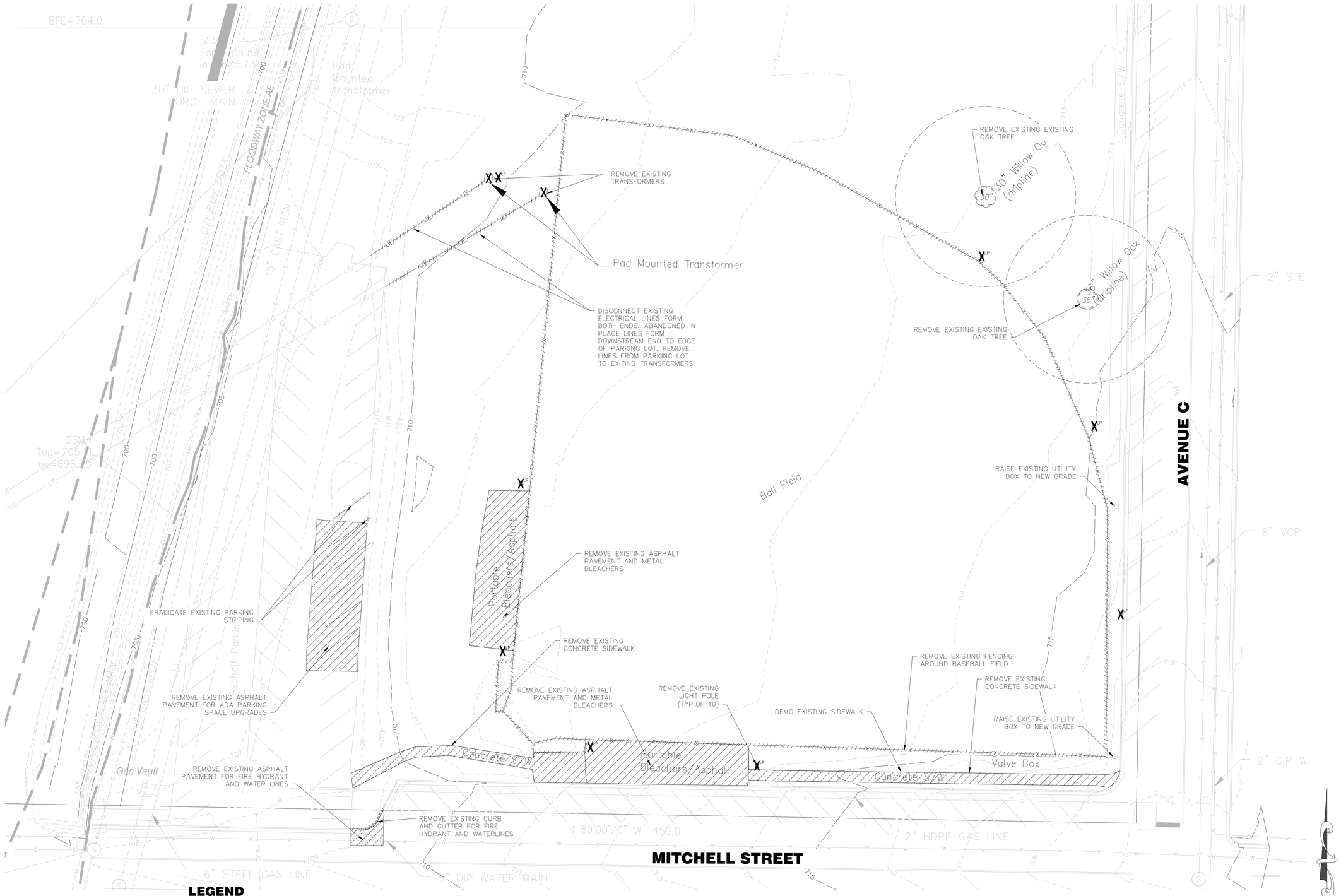

LEGEND

LINEAR ITEM TO BE DEMOLISHED/REMOVED	//////////////////
ITEM TO BE DEMOLISHED/REMOVED	X
AREA OF BUILDING OR PAVEMENT TO BE DEMOLISHED	

GEORGIA811
www.Georgia811.com
Know what's below. Call before you dig.

1 / C-101 **EXISTING CONDITIONS AND DEMO PLAN**
SCALE:1" = 20'

GRAPHIC SCALE
20 0 10 20 40 80
(IN FEET)
1 inch = 20 ft.

PRIME
A Stratus Team Company
5715 NORTHSIDE PARKWAY NW
BUILDING 300, SUITE 200
ATLANTA, GEORGIA 30327
404-425-7100

PROJECT:
DALTON PICKLEBALL COMPLEX
904 CIVIC DR,
DALTON, GA 30721

PREPARED FOR:
CITY OF DALTON, GA

REVISIONS

NO.	DATE	DESCRIPTION

SEAL
GEORGIA REGISTERED No. PE044235 PROFESSIONAL ENGINEER KATHRYN D. KIRKLAND
DATE: 08/09/2024

© 2024 PRIME ENGINEERING, INC. Scales, as stated hereon, are valid on the original drawing; the dimensions of which are 24 by 36 inches. These scales, noted hereon, are hereby changed by the ratio of the overall sheet dimensions of the print to corresponding dimensions of the original drawing. This drawing is the property of PRIME ENGINEERING, INCORPORATED and is not to be reproduced or copied in whole or in part. It is only to be used for the project and site specifically identified hereth and is not to be used on any other project. It is to be returned upon request.

DRAWING TITLE
EXISTING CONDITIONS AND DEMO PLAN

DRAWING DATE 08/09/2024	DRAWN BY SY	
DRAWING SCALE 1" = 20'	DESIGNED BY KDS	
PROJECT NUMBER 2024-0283	CHECKED BY KLK	
DRAWING NUMBER C-101		NOT ISSUED FOR CONSTRUCTION

R:\A-Z\City of Dalton, GA\2024-0283 Dalton-Pickleball Complex\3 ENGINEERING\Drawings\C-101 - EXISTING CONDITIONS AND DEMO PLAN - 2024-0283.dwg Thu, 08/08/24 10:54 AM

1 C-201 **STAKING AND LAYOUT PLAN**
SCALE:1" = 20'

GEORGIA811 www.Georgia811.com Know what's below. Call before you dig.

R:\A-Z\City of Dalton, GA\2024-0283 Dalton-Pickleball Complex\3 ENGINEERING\Drawings\C-201 - STAKING AND LAYOUT PLAN - 2024-0283.dwg Thu, 08/08/24 10:54 AM

PRIME A Stratus Team Company
5715 NORTHSIDE PARKWAY NW
BUILDING 300, SUITE 200
ATLANTA, GEORGIA 30327
404-425-7100

PROJECT:
DALTON PICKLEBALL COMPLEX
904 CIVIC DR,
DALTON, GA 30721

PREPARED FOR:
CITY OF DALTON, GA

REVISIONS

NO.	DATE	DESCRIPTION

SEAL

GEORGIA REGISTERED No. PE044235 PROFESSIONAL ENGINEER KATHRYN D. SHEPHARD

DATE: 08/09/2024

© 2024 PRIME ENGINEERING, INC. Scales, as stated hereon, are valid on the original drawing; the dimensions of which are 24 by 36 inches. These scales, noted hereon, are hereby changed by the ratio of the overall sheet dimensions of the print to corresponding dimensions of the original drawing. This drawing is the property of PRIME ENGINEERING, INCORPORATED and is not to be reproduced or copied in whole or in part. It is only to be used for the project and site specifically identified herein and is not to be used on any other project. It is to be returned upon request.

DRAWING TITLE
STAKING AND LAYOUT PLAN

DRAWN BY SY	DESIGNED BY KDS	CHECKED BY KLK	
DRAWING DATE 08/09/2024	DRAWING SCALE 1" = 20'	PROJECT NUMBER 2024-0283	DRAWING NUMBER C-201

NOT ISSUED FOR CONSTRUCTION

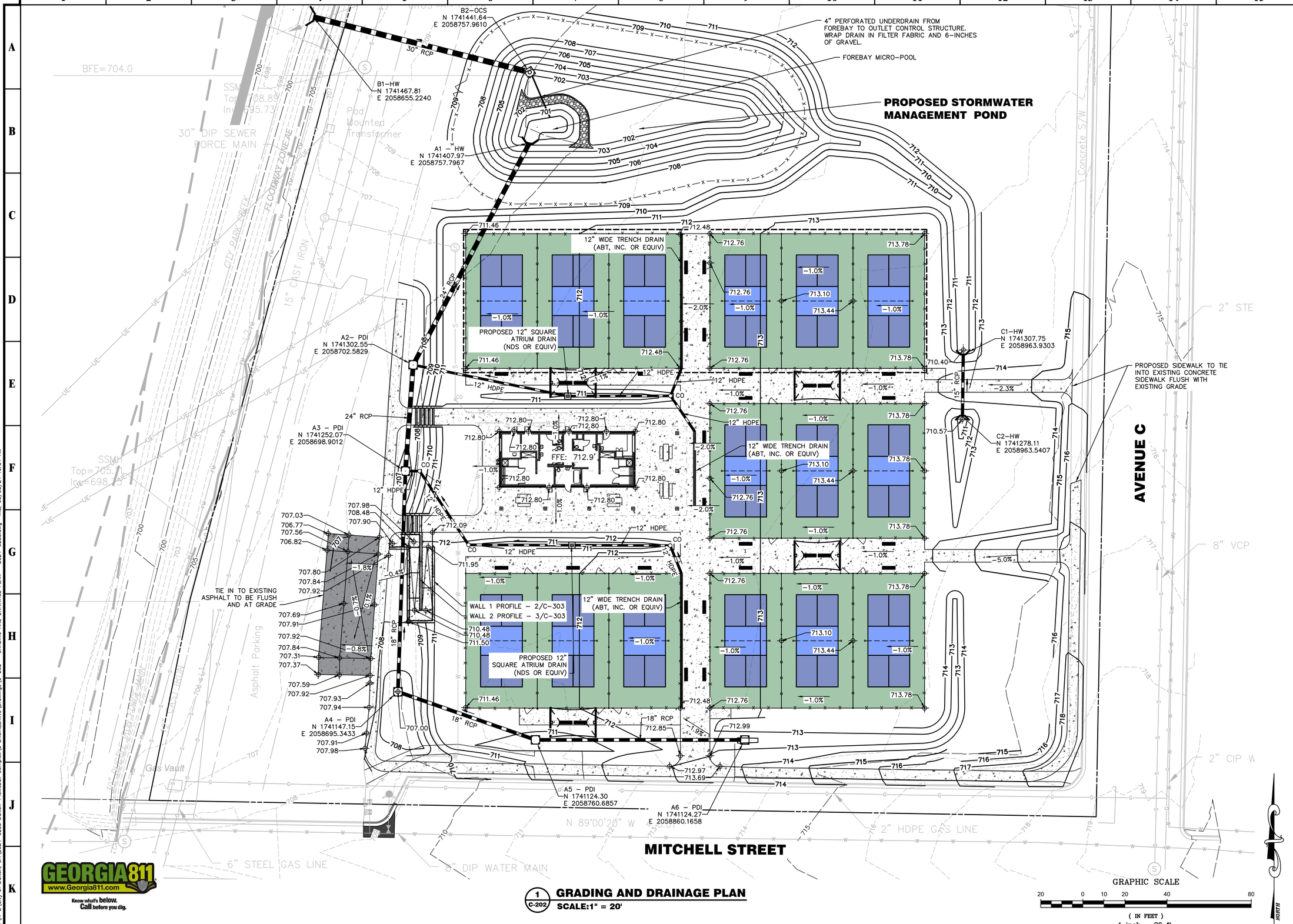

1 C-202 **GRADING AND DRAINAGE PLAN**
SCALE:1" = 20'

GEORGIA811 www.Georgia811.com
Know what's below. Call before you dig.

R:\A-2\City of Dalton, GA\2024-0283 Dalton-Pickleball Complex\3 ENGINEERING\Drawings\C-202 - GRADING AND DRAINAGE PLAN - 2024-0283.dwg Thu, 08/08/24 10:54 AM

PRIME A Stratus Team Company
3115 NORTHSIDE PARKWAY NW
BUILDING 600, SUITE 200
ATLANTA, GEORGIA 30327
404-425-7100

PROJECT:
DALTON PICKLEBALL COMPLEX
904 CIVIC DR,
DALTON, GA 30721

PREPARED FOR:
CITY OF DALTON, GA

REVISIONS

NO.	DATE	DESCRIPTION

SEAL

GEORGIA REGISTERED No. PE044235 PROFESSIONAL ENGINEER KATHRYN D. STREET

DATE: 08/09/2024

© 2024 PRIME ENGINEERING, INC. Scales, as stated hereon, are valid on the original drawing; the dimensions of which are 24 by 36 inches. These scales, noted hereon, are hereby changed by the ratio of the overall sheet dimensions of the print to corresponding dimensions of the original drawing. This drawing is the property of PRIME ENGINEERING, INCORPORATED and is not to be reproduced or copied in whole or in part. It is only to be used for the project and site specifically identified herein and is not to be used on any other project. It is to be returned upon request.

DRAWING TITLE
GRADING AND DRAINAGE PLAN

DRAWING DATE 08/09/2024	DRAWN BY SY	DESIGNED BY KDS
DRAWING SCALE 1" = 20'	CHECKED BY KLK	
PROJECT NUMBER 2024-0283	DRAWING NUMBER C-202	

NOT ISSUED FOR CONSTRUCTION

NOTES:

1. LOCATING WIRE SHALL BE 8 GAGE, COATED WIRE FOR THE HDPE MAIN LINES AND 12 GAGE, COATED WIRE FOR THE HDPE SERVICES LINES. DETECTION TAPE SHALL BE COMPOSED OF A SOLIDE ALUMINUM FOIL ENCASED IN A PROTECTIVE PLASTIC JACKET.
2. HDPE PIPE:POLYETHYLENE PIPE SHALL CONFORM TO ANSI/AWWA STANDARD C906-90 (OR MOST RECENT EDITION) AND NSF 61. THE PIPE SHALL BE 3408 WITH AN SDR OF 9 AS DIRECTED BY THE OWNER AND BE RATED FOR A PRESSURE OF 200 P.S.I., RESPECTIVELY.
3. CONNECTION TO THE MAIN LINES SHALL BE MADE BY TAPPING INTO THE MAIN THROUGH A CORPORATION STOP. A COPORATION COCK MUST BE PROVIDED IN THE WATER MAIN FOR EACH NEW SERVICE LINE. THE JOINTS SHALL WITHSTAND 200 PSI TEST PRESSURE.
4. BEDDING AND SERVICE LINES SHALL BE EQUAL TO THAT USED FOR DUCTILE IRON PIPE.
5. TAPPING SADDLES AND TAPPING SLEEVES SHALL BE INSTALLED AS FOLLOWS:
   - 5.1. HOLES IN NEW PIPE SHALL BE MACHINE CUT, EITHER IN THE FIELD OR AT THE FACTORY. NO TORCH CUTTING OF HOLES SHALL BE ALLOWED.
   - 5.2. PRIOR TO ATTACHING SADDLES OR SLEEVES, THE EXITING PIPE SHALL BE THOROUGHLY CLEANED, UTILIZING A BRUSH AND RAG TO THE SATISFACTION OF THE OWNER.
   - 5.3. BEFORE PERFORMING FIELD MACHINE CUT, THE WATERTIGHTNESS OF THE SADDLE OF SLEEVE ASSEMBLY SHALL BE PRESSURE TESTED. THE INTERIOR OF THE ASSEMBLY SHALL BE FILLED WITH WATER. AN AIR COMPRESSOR SHALL BE ATTACHED WHICH WILL INDUCE A TEST PRESSURE OF 200 P.S.I. NO LEAKAGE SHALL BE PERMITTED FOR A PERIOD OF 10 MINUTES.

1 C-203 **UTILITY PLAN**
SCALE:1" = 20'

PRIME
A Stratus Team Company
5715 NORTHSIDE PARKWAY NW
BUILDING 300, SUITE 200
ATLANTA, GEORGIA 30327
404-425-7100

PROJECT:
DALTON PICKLEBALL COMPLEX
904 CIVIC DR,
DALTON, GA 30721

PREPARED FOR:
CITY OF DALTON, GA

REVISIONS

NO.	DATE	DESCRIPTION

SEAL

GEORGIA REGISTERED No. PE044235 PROFESSIONAL ENGINEER KATHRYN D. KREIGER

DATE: 08/09/2024

© 2024 PRIME ENGINEERING, INC. Scales, as stated hereon, are valid on the original drawing; the dimensions of which are 24 by 36 inches. These scales, noted hereon, are hereby changed by the ratio of the overall sheet dimensions of the print to corresponding dimensions of the original drawing. This drawing is the property of PRIME ENGINEERING, INCORPORATED and is not to be reproduced or copied in whole or in part. It is only to be used for the project and site specifically identified herein and is not to be used on any other project. It is to be returned upon request.

DRAWING TITLE
UTILITY PLAN

DRAWING DATE	08/09/2024
DRAWN BY	SY
DRAWING SCALE	1" = 20'
DESIGNED BY	KDS
PROJECT NUMBER	2024-0283
CHECKED BY	KLK
DRAWING NUMBER	C-203

NOT ISSUED FOR CONSTRUCTION

R:\A-Z\City of Dalton, GA\2024-0283 Dalton-Pickleball Complex\3 ENGINEERING\Drawings\C-203 - UTILITY PLAN - 2024-0283.dwg Thu, 08/08/24 10:54 AM

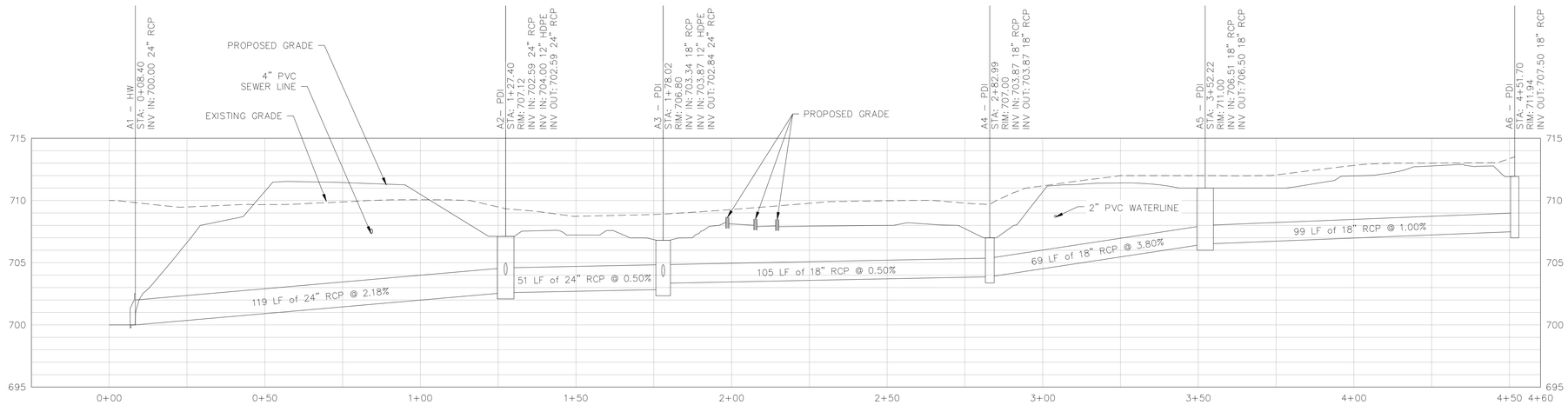

1 / C-301 STORM LINE A PROFILE
SCALE: 1"=20'-HORZ. 1"=5'-VERT.

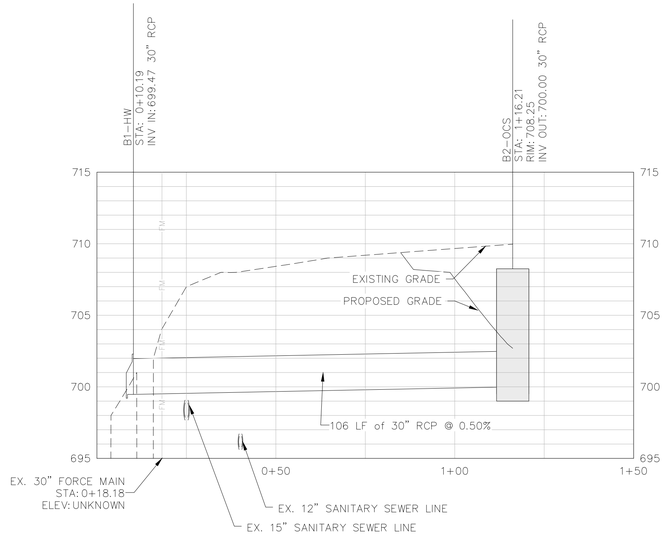

2 / C-302 STORM LINE B PROFILE
SCALE: 1"=20'-HORZ. 1"=5'-VERT.

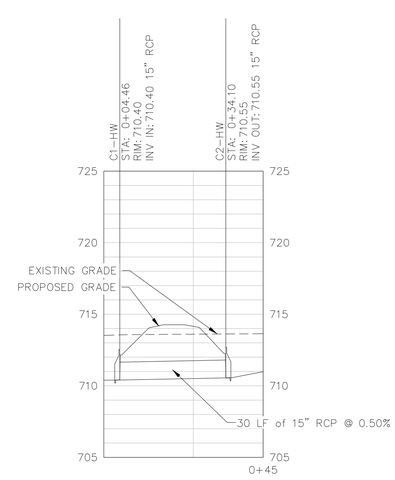

3 / C-302 STORM LINE C PROFILE
SCALE: 1"=20'-HORZ. 1"=5'-VERT.

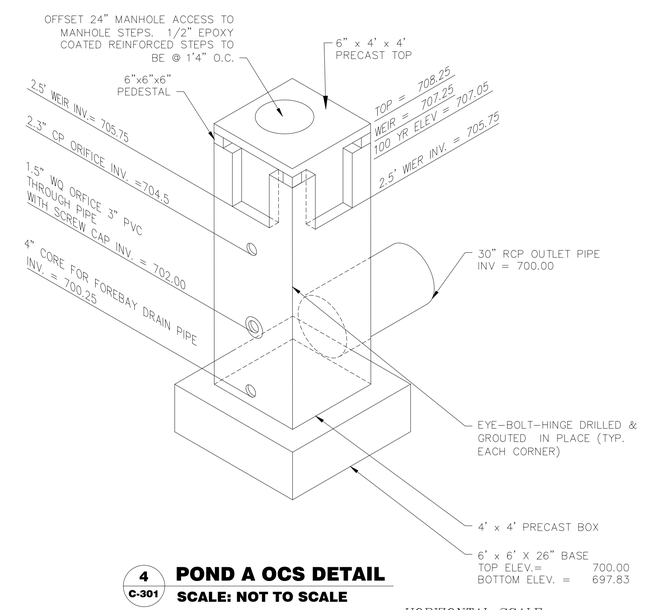

4 / C-301 POND A OCS DETAIL
SCALE: NOT TO SCALE

HORIZONTAL SCALE

20 0 10 20 40 80

(IN FEET)
1 inch = 20 ft.

VERTICAL SCALE

5 0 5 10 20

(IN FEET)
1 inch = 5 ft.

GEORGIA811
www.Georgia811.com
Know what's below. Call before you dig.

PRIME
A Stratus Team Company
5715 NORTHSIDE PARKWAY NW
BUILDING 300, SUITE 200
ATLANTA, GEORGIA 30327
404-425-7100

PROJECT:
DALTON PICKLEBALL COMPLEX
904 CIVIC DR,
DALTON, GA 30721

PREPARED FOR:
CITY OF DALTON, GA

REVISIONS

NO.	DATE	DESCRIPTION

SEAL

GEORGIA REGISTERED No. PE044235 PROFESSIONAL KATHRYN D. STREJKAUSKAS

DATE: 08/09/2024

© 2024 PRIME ENGINEERING, INC. Scales, as stated hereon, are valid on the original drawing; the dimensions of which are 24 by 36 inches. These scales, noted hereon, are hereby changed by the ratio of the overall sheet dimensions of the print to corresponding dimensions of the original drawing. This drawing is the property of PRIME ENGINEERING, INCORPORATED and is not to be reproduced or copied in whole or in part. It is only to be used for the project and site specifically identified herein and is not to be used on any other project. It is to be returned upon request.

DRAWING TITLE
STORM WATER PROFILES

DRAWING DATE 08/09/2024	DRAWN BY SY	DESIGNED BY KDS	CHECKED BY KLK
DRAWING SCALE AS SHOWN	PROJECT NUMBER 2024-0283	DRAWING NUMBER **C-301**	NOT ISSUED FOR CONSTRUCTION

R:\A-Z\City of Dalton, GA\2024-0283 Dalton-Pickleball Complex\3 ENGINEERING\Drawings\C-301 – STORM WATER PROFILES – 2024-0283.dwg Thu, 08/08/24 10:54 AM

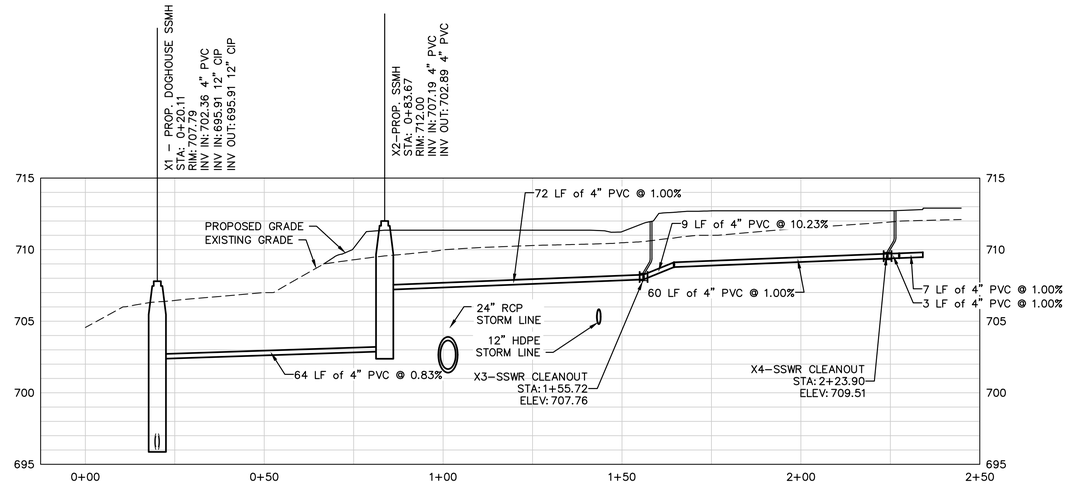

1 / C-303 SSWR LINE X PROFILE
SCALE: 1"=20'-HORZ. 1"=5'-VERT.

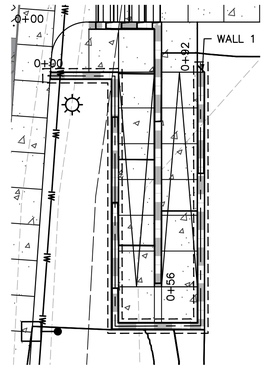

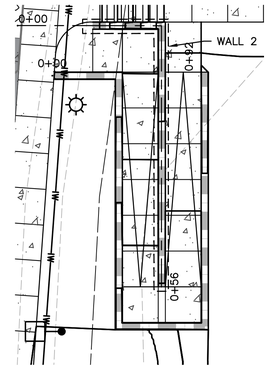

NOTE:
WALL ELEVATIONS FOR REFERENCE ONLY. CONTRACTOR &/OR WALL MANUFACTURER TO PROVIDE STAMPED DRAWINGS FOR APPROVAL AND PERMIT WITH WHITFIELD COUNTY.

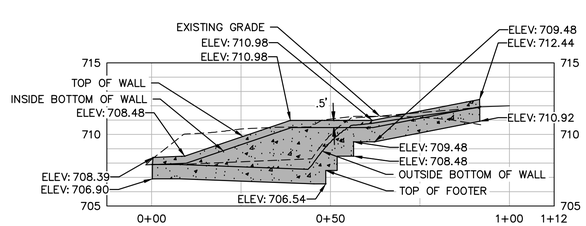

2 / C-303 WALL 1 PROFILE
SCALE: 1"=20'-HORZ. 1"=5'-VERT.

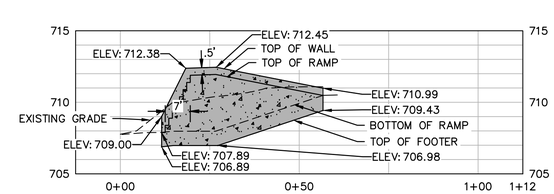

3 / C-303 WALL 2 PROFILE
SCALE: 1"=20'-HORZ. 1"=5'-VERT.

GRAPHIC SCALE
10 0 5 10 20 40
(IN FEET)
1 inch = 10 ft.

HORIZONTAL SCALE
20 0 10 20 40 80
(IN FEET)
1 inch = 20 ft.

VERTICAL SCALE
5 0 5 10 20
(IN FEET)
1 inch = 5 ft.

NORTH

GEORGIA811
www.Georgia811.com
Know what's below. Call before you dig.

PRIME
A Stratus Team Company
EMESNORTHSIDEPARKWAYNW
BUILDING 600 SUITE 200
ATLANTA, GEORGIA 30327
404-425-7100

PROJECT:
DALTON PICKLEBALL COMPLEX
904 CIVIC DR,
DALTON, GA 30721
PREPARED FOR:
CITY OF DALTON, GA

REVISIONS

NO.	DATE	DESCRIPTION

SEAL
GEORGIA REGISTERED No. PE044235 PROFESSIONAL ENGINEER KATHRYN D. SPROKAND
DATE: 08/09/2024

© 2024 PRIME ENGINEERING, INC. Scales, as stated hereon, are valid on the original drawing; the dimensions of which are 24 by 36 inches. These scales, noted hereon, are hereby changed by the ratio of the overall sheet dimensions of the print to corresponding dimensions of the original drawing. This drawing is the property of PRIME ENGINEERING, INCORPORATED and is not to be reproduced or copied in whole or in part. It is only to be used for the project and site specifically identified herein and is not to be used on any other project. It is to be returned upon request.

DRAWING TITLE
SANITARY SEWER & WALL PROFILES

DRAWING DATE	08/09/2024
DRAWING SCALE	AS SHOWN
PROJECT NUMBER	2024-0283
DRAWING NUMBER	C-303
DRAWN BY	SY
DESIGNED BY	KDS
CHECKED BY	KLK

NOT ISSUED FOR CONSTRUCTION

R:\A-Z\City of Dalton, GA\2024-0283 Dalton-Pickleball Complex\3 ENGINEERING\Drawings\C-302 - SANITARY SEWER PROFILES - 2024-0283.dwg Thu, 08/08/24 10:55 AM

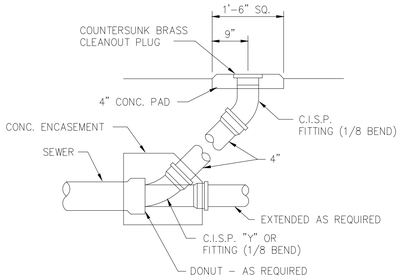

1 C-401 SEWER CLEANOUT DETAIL
SCALE: NOT TO SCALE

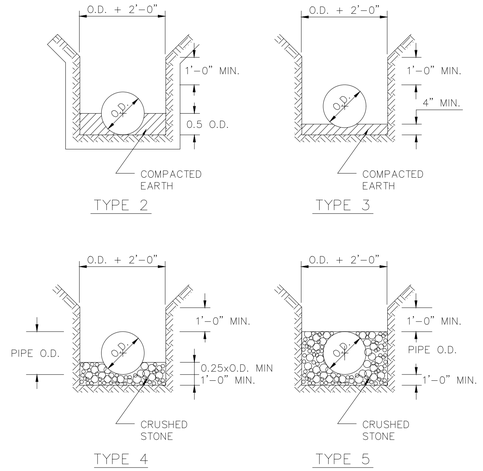

2 C-401 PIPE BEDDING AND HAUNCHING DETAILS
SCALE: NOT TO SCALE

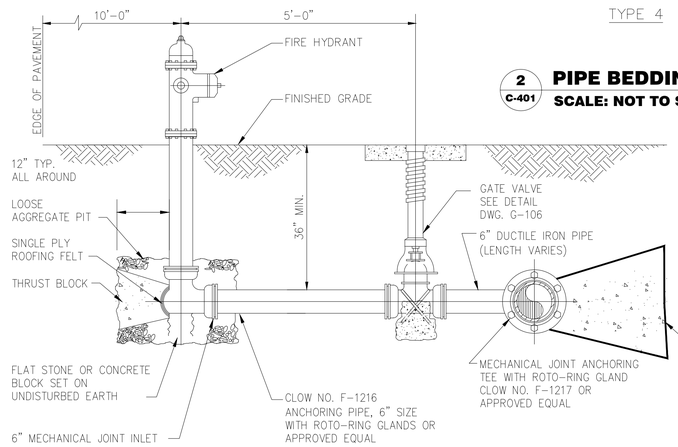

3 C-401 FIRE HYDRANT INSTALLATION DETAIL
SCALE: NOT TO SCALE

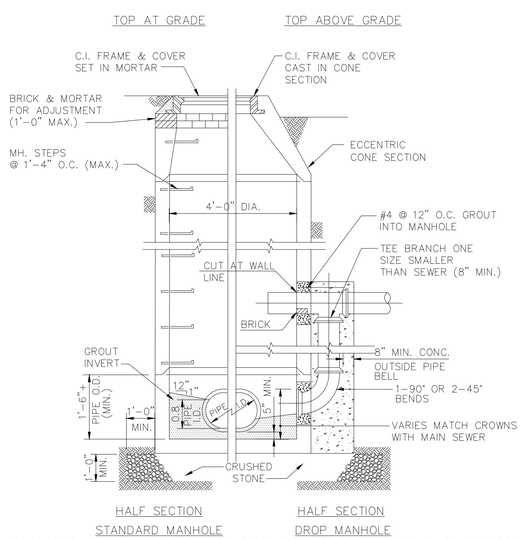

3 C-401 PRECAST CONCRETE MANHOLE WITH DROP CONNECTION
SCALE: NOT TO SCALE

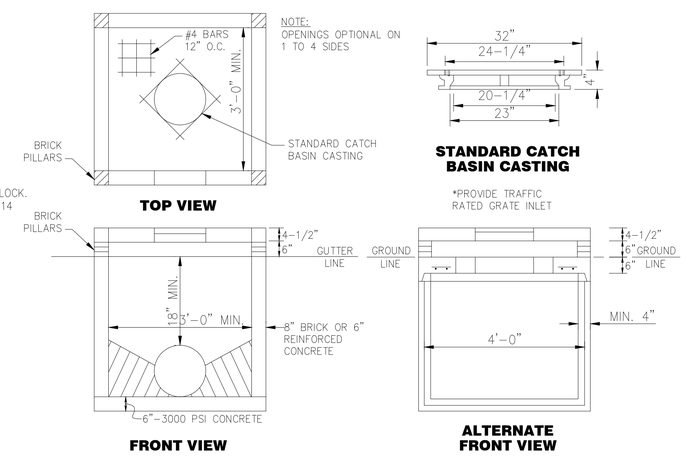

6 C-401 PEDESTAL DROP INLET
SCALE: NOT TO SCALE

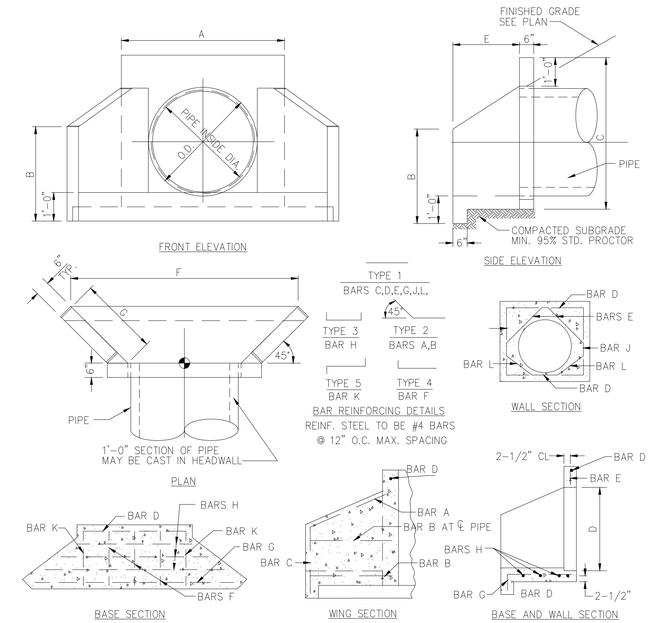

VARIABLE DIMENSIONS (CONCRETE PIPE)

CU. YDS. CONC.	INSIDE DIA. PIPE	AREA PIPE OPENING	A	B	C	D	E	F	G	WT.	BASE AREA
0.43	18"	1.76	3'-5"	2'-4"	3'-4 1/2"	2'-0"	1'-5"	4'-10"	2'-0"	1783	8.30
0.50	21"	2.40	3'-8 1/2"	2'-6"	3'-8"	2'-3 1/2"	1'-6"	5'-3 1/2"	2'-1 1/2"	2020	9.40
0.51	24"	3.14	4'-0"	2'-9"	3'-11"	2'-7"	1'-8"	5'-11"	2'-4 1/2"	2063	11.90
0.79	30"	4.91	4'-6 1/2	3'-1"	4'-5 1/2"	3'-1 1/2"	2'-0"	7'-1 1/2"	2'-10"	3182	15.10
1.00	36"	7.07	8'-1"	3'-5"	5'-0"	3'-8"	2'-4"	8'-0"	3'-3 1/2"	4060	19.60

VARIABLE DIMENSIONS (CORRUGATED METAL PIPE)

CU. YDS. CONC.	INSIDE DIA. PIPE	AREA PIPE OPENING	A	B	C	D	E	F	G	WT.	BASE AREA
0.38	18"	1.76	3'-2"	2'-3"	3'-2"	1'-9"	1'-4"	4'-5"	1'-10 1/2"	1649	7.34
0.44	21"	2.40	3'-5"	2'-5"	3'-5"	2'-0"	1'-5"	4'-10"	2'-0"	1778	8.32
0.52	24"	3.14	3'-8"	2'-7"	3'-9"	2'-3"	1'-7"	5'-6"	2'-3"	2108	9.90
0.70	30"	4.91	4'-2"	2'-11"	4'-2"	2'-9"	1'-11"	6'-7"	2'-6 1/2"	2834	13.50
0.91	36"	7.07	4'-8"	3'-3"	4'-8"	3'-3"	2'-3"	7'-9"	3'-2 1/4"	3679	17.65

NOTES:
1. ALL CONCRETE SHALL BE 4000 PSI
2. REINF. STEEL SHALL BE #4 BARS, GRADE 60.
3. PLACE REINF. 2" CLEAR MIN.
4. CHAMFER ALL EXPOSED EDGES 3/4"

5 C-401 HEADWALL DETAIL
SCALE: NOT TO SCALE

PRIME
A Stratus Team Company
5715 NORTHSIDE PARKWAY NW
BUILDING 300, SUITE 200
ATLANTA, GEORGIA 30327
404-425-7100

PROJECT:
DALTON PICKLEBALL COMPLEX
904 CIVIC DR,
DALTON, GA 30721

PREPARED FOR:
CITY OF DALTON, GA

REVISIONS		
NO.	DATE	DESCRIPTION

SEAL

GEORGIA REGISTERED No. PE044235 PROFESSIONAL ENGINEER KATHRYN D. KLEPPINGER

DATE: 08/09/2024

© 2024 PRIME ENGINEERING, INC. Scales, as stated hereon, are valid on the original drawing; the dimensions of which are 24 by 36 inches. These scales, noted hereon, are hereby changed by the ratio of the overall sheet dimensions of the print to corresponding dimensions of the original drawing. This drawing is the property of PRIME ENGINEERING, INCORPORATED and is not to be reproduced or copied in whole or in part. It is only to be used for the project and site specifically identified hereon and is not to be used on any other project. It is to be returned upon request.

DRAWING TITLE
CONSTRUCTION DETAILS

DRAWING DATE	DRAWN BY	CHECKED BY
08/09/2024	SY	KLK
DRAWING SCALE	DESIGNED BY	
AS NOTED	KDS	
PROJECT NUMBER	DRAWING NUMBER	
2024-0283	C-401	

NOT ISSUED FOR CONSTRUCTION

R:\A-Z\City of Dalton, GA\2024-0283 Dalton-Pickleball Complex\3 ENGINEERING\Drawings\C-401 - CONSTRUCTION DETAILS - 2024-0283.dwg Thu, 08/08/24 10:55 AM

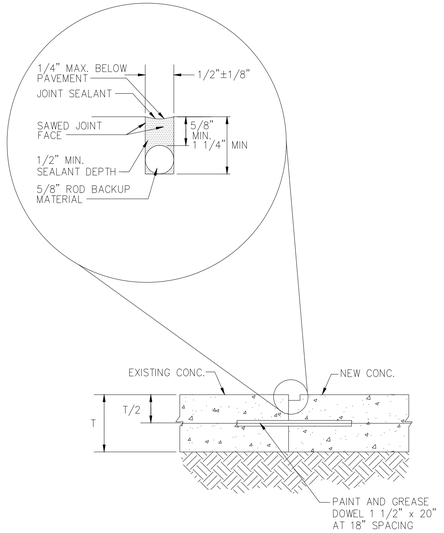

1 / C-402 DOWELED CONSTRUCTION JOINT
SCALE: NOT TO SCALE

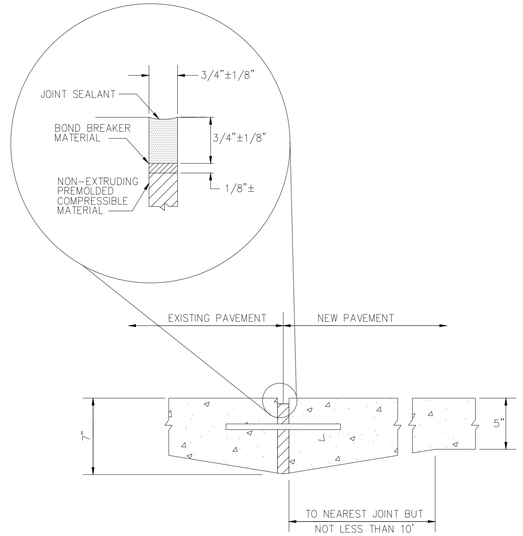

2 / C-402 DOWELED EXPANSION JOINT
SCALE: NOT TO SCALE

SIDEWALK WIDTH (FT.)	JOINT SPACING (FT.)	
	A	B
3	3	48
5	5	50
6	6	48
8	8	48
10*	5	50
12*	6	48
20	10	50

* : LONGITUDINAL CONTRACTION JOINT REQUIRED.

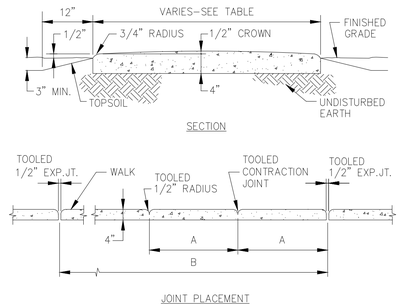

3 / C-402 CONCRETE SIDEWALK
SCALE: NOT TO SCALE

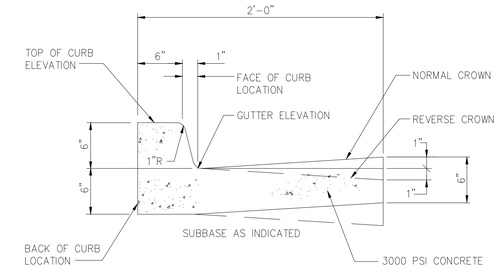

NOTES:
1. USE NORMAL OR REVERSE CROWN TO MATCH DIRECTION OF PAVEMENT SLOPE.
2. EXPANSION JOINTS: 1/2" WIDE, FULL DEPTH, AT 50' INTERVALS, TRANSVERSELY, AT ABUTTING STRUCTURES AND AT DRIVEWAYS, TANGENT POINTS OF RADIUS RETURNS AND STREET INTERSECTIONS.
3. CONTRACTION JOINTS: 1" DEEP SAWCUTS ON 10 FT. CENTERS TRANSVERSLEY.

4 / C-402 CURB AND GUTTER DETAIL
SCALE: NOT TO SCALE

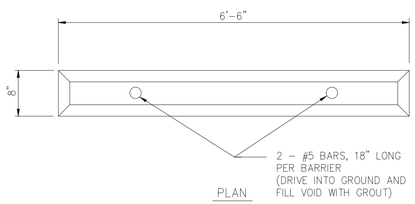

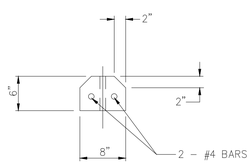

5 / C-402 WHEEL STOP
SCALE: NOT TO SCALE

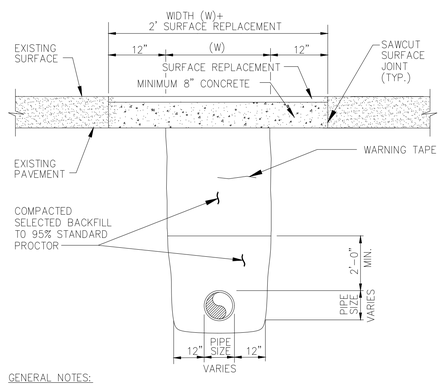

GENERAL NOTES:
1. ASPHALT - CONCRETE PAVEMENT JOINTS SHALL BE MECHANICALLY SAWED.
2. SURFACE TREATED PAVEMENT JOINTS SHALL BE LAPPED AND FEATHERED.
3. SURFACE MATERIAL SHALL BE CONSISTENT WITH THE EXISTING SURFACE.

6 / C-402 OPEN CUT PAVEMENT REPAIR
SCALE: NOT TO SCALE

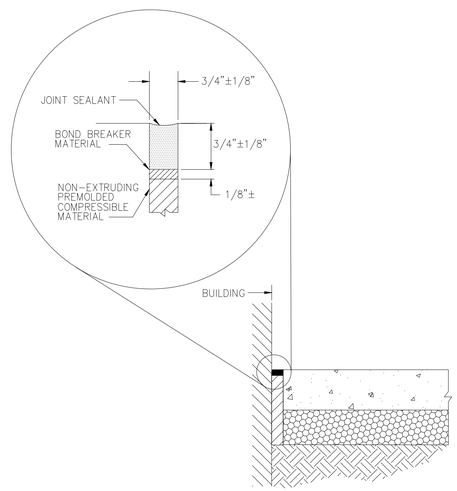

7 / C-402 PAVING/BUILDING INTERFACE
SCALE: NOT TO SCALE

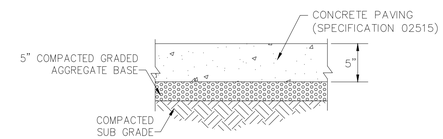

8 / C-402 CONCRETE PAVEMENT
SCALE: NOT TO SCALE

PRIME
A Stratus Team Company
3715 NORTHSIDE PARKWAY NW
BUILDING 300, SUITE 200
ATLANTA, GEORGIA 30327
404-425-7100

PROJECT:
DALTON PICKLEBALL COMPLEX
904 CIVIC DR,
DALTON, GA 30721

PREPARED FOR:
CITY OF DALTON, GA

REVISIONS

NO.	DATE	DESCRIPTION

SEAL

GEORGIA REGISTERED PROFESSIONAL ENGINEER No. PE041435 KATHRYN D. SHEPPARD

DATE: 08/09/2024

© 2024 PRIME ENGINEERING, INC. Scales, as stated hereon, are valid on the original drawing; the dimensions of which are 24 by 36 inches. These scales, noted hereon, are hereby changed by the ratio of the overall sheet dimensions of the print to corresponding dimensions of the original drawing. This drawing is the property of PRIME ENGINEERING, INCORPORATED and is not to be reproduced or copied in whole or in part. It is only to be used for the project and site specifically identified hereon and is not to be used on any other project. It is to be returned upon request.

DRAWING TITLE
CONSTRUCTION DETAILS

DRAWING DATE 08/09/2024	DRAWN BY SY		
DRAWING SCALE AS NOTED	DESIGNED BY KDS		
PROJECT NUMBER 2024-0283	CHECKED BY KLK		
DRAWING NUMBER C-402			NOT ISSUED FOR CONSTRUCTION

R:\A-Z\City of Dalton, GA\2024-0283 Dalton-Pickleball Complex\3 ENGINEERING\Drawings\C-401 - CONSTRUCTION DETAILS - 2024-0283.dwg Thu, 08/08/24 10:55 AM

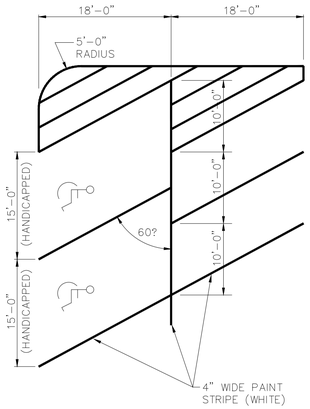

1 / C-403 60° PARKING SPACE DETAIL
SCALE: NOT TO SCALE

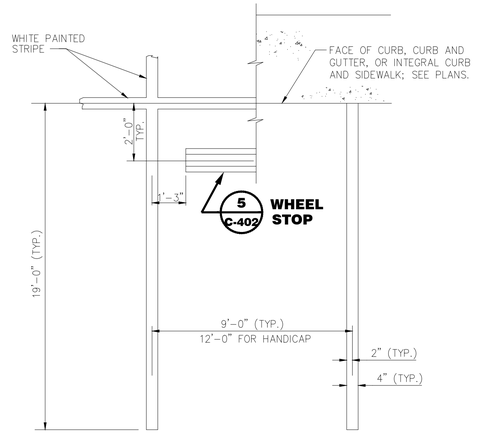

2 / C-403 PARKING SPACE DETAIL
SCALE: NOT TO SCALE

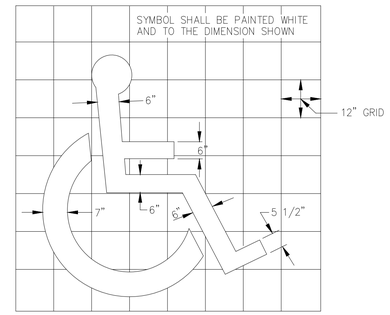

3 / C-403 ADA SYMBOL PAINT DETAIL
SCALE: NOT TO SCALE

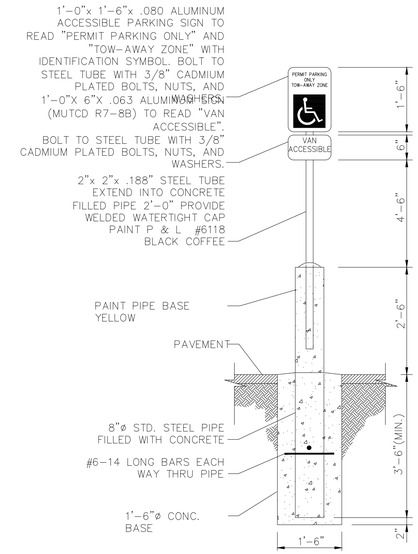

NOTES:

1. PROVIDE ACCESSIBLE PARKING SIGN AT ALL HANDICAP SPACES.
2. PROVIDE "VAN ACCESSIBLE" SIGN AS REQUIRED ON PLANS.

4 / C-403 ADA SIGN DETAIL
SCALE: NOT TO SCALE

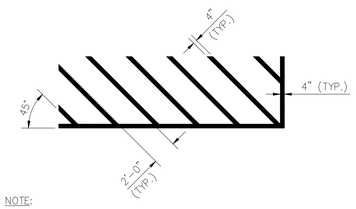

NOTE:
ALL STRIPES SHALL BE PAINTED WITH YELLOW PAINT THAT COMPLIES WITH FS TT-P-115, TYPE 1, OR AASHTO M-248, TYPE N.

5 / C-403 ISLAND STRIPIING
SCALE: NOT TO SCALE

PRIME
A Stratus Team Company
5715 NORTHSIDE PARKWAY NW
BUILDING 300, SUITE 200
ATLANTA, GEORGIA 30327
404-425-7100

PROJECT:
DALTON PICKLEBALL COMPLEX
904 CIVIC DR,
DALTON, GA 30721

PREPARED FOR:
CITY OF DALTON, GA

REVISIONS

NO.	DATE	DESCRIPTION

SEAL

GEORGIA REGISTERED No. PE044235 PROFESSIONAL ENGINEER KATHRYN D. KIRKPATRICK

DATE: 08/09/2024

© 2024 PRIME ENGINEERING, INC.

Scales, as stated hereon, are valid on the original drawing; the dimensions of which are 24 by 36 inches. These scales, noted hereon, are hereby changed by the ratio of the overall sheet dimensions of the print to corresponding dimensions of the original drawing. This drawing is the property of PRIME ENGINEERING, INCORPORATED and is not to be reproduced or copied in whole or in part. It is only to be used for the project and site specifically identified herein and is not to be used on any other project. It is to be returned upon request.

DRAWING TITLE

CONSTRUCTION DETAILS

DRAWING DATE 08/09/2024	DRAWN BY SY
DRAWING SCALE AS NOTED	DESIGNED BY KDS
PROJECT NUMBER 2024-0283	CHECKED BY KLK
DRAWING NUMBER C-403	

NOT ISSUED FOR CONSTRUCTION

R:\A-Z\City of Dalton, GA\2024-0283 Dalton-Pickleball Complex\3 ENGINEERING\Drawings\C-401 - CONSTRUCTION DETAILS - 2024-0283.dwg Thu, 08/08/24 10:55 AM

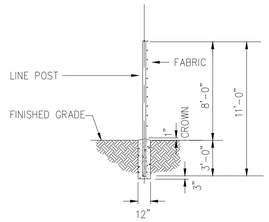

TYPICAL FENCE SECTION

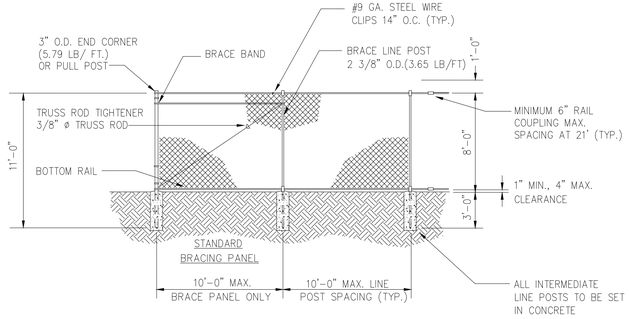

NOTES:
1. CROSS ARMS NOT SHOWN FOR CLARITY.
2. MATCH POST SPACING OF EXISTING FENCE.

TYPICAL FENCE ELEVATION

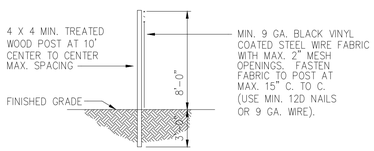

TEMPORARY FENCE DETAILS

1 / C-404 TYPICAL FENCE DETAIL
SCALE: NOT TO SCALE

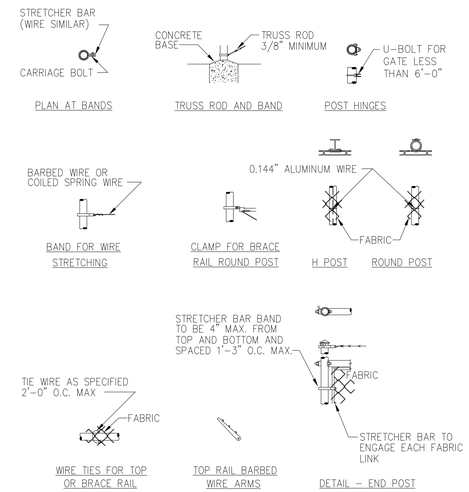

2 / C-404 FENCE FASTENING DETAILS
SCALE: NOT TO SCALE

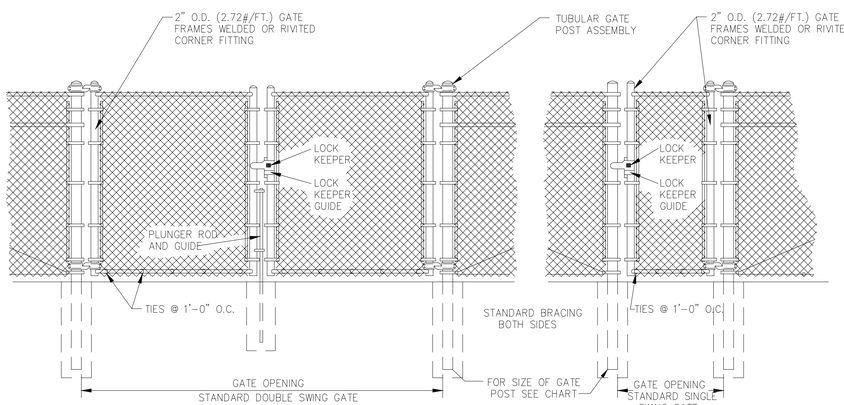

GATE ELEVATION

GATE CHART				
GATE OPENINGS		POST SIZE	DEPTH OF POST SETTING	CONCRETE FOOTING
SINGLE	DOUBLE			
UP TO AND INCLUDING 6'-0" OPNG.	UP TO AND INCLUDING 12'-0" OPNG.	3" O.D. (5.79 #/FT.)	36"	10" x 36"
OVER 6'-0" OPNG. THRU 13'-0" OPNG.	OVER 12'-0" OPNG. THRU 26'-0" OPNG.	4" O.D. (9.1 #/FT.)	36"	10" x 36"
OVER 13'-0" OPNG. THRU 18'-0" OPNG.	OVER 26'-0" OPNG. THRU 36'-0" OPNG.	6 5/8" O.D. (18.97 #/FT.)	42"	18"x42"
OVER 18'-0" OPNG.	OVER 36'-0" OPNG.	8 5/8" O.D. (24.70 #/FT.)	48"	24"x48"

3 / C-404 TYPICAL GATE DETAIL
SCALE: NOT TO SCALE

PRIME
A Stratus Team Company
5715 NORTHSIDE PARKWAY NW
BUILDING 300, SUITE 200
ATLANTA, GEORGIA 30327
404-425-7100

PROJECT:
DALTON PICKLEBALL COMPLEX
904 CIVIC DR,
DALTON, GA 30721

PREPARED FOR:
CITY OF DALTON, GA

REVISIONS

NO.	DATE	DESCRIPTION

SEAL

GEORGIA REGISTERED PROFESSIONAL ENGINEER No. PE044235 KATHRYN D. KEMP

DATE: 08/09/2024

© 2024 PRIME ENGINEERING, INC. Scales, as stated hereon, are valid on the original drawing; the dimensions of which are 24 by 36 inches. These scales, noted hereon, are hereby changed by the ratio of the overall sheet dimensions of the print to corresponding dimensions of the original drawing. This drawing is the property of PRIME ENGINEERING, INCORPORATED and is not to be reproduced or copied in whole or in part. It is only to be used for the project and site specifically identified herein and is not to be used on any other project. It is to be returned upon request.

DRAWING TITLE
CONSTRUCTION DETAILS

DRAWING DATE 08/09/2024	DRAWN BY SY
DRAWING SCALE AS NOTED	DESIGNED BY KDS
PROJECT NUMBER 2024-0283	CHECKED BY KLK
DRAWING NUMBER C-404	NOT ISSUED FOR CONSTRUCTION

R:\A-Z\City of Dalton, GA\2024-0283 Dalton-Pickleball Complex\3 ENGINEERING\Drawings\C-401 - CONSTRUCTION DETAILS - 2024-0283.dwg Thu, 08/08/24 10:55 AM

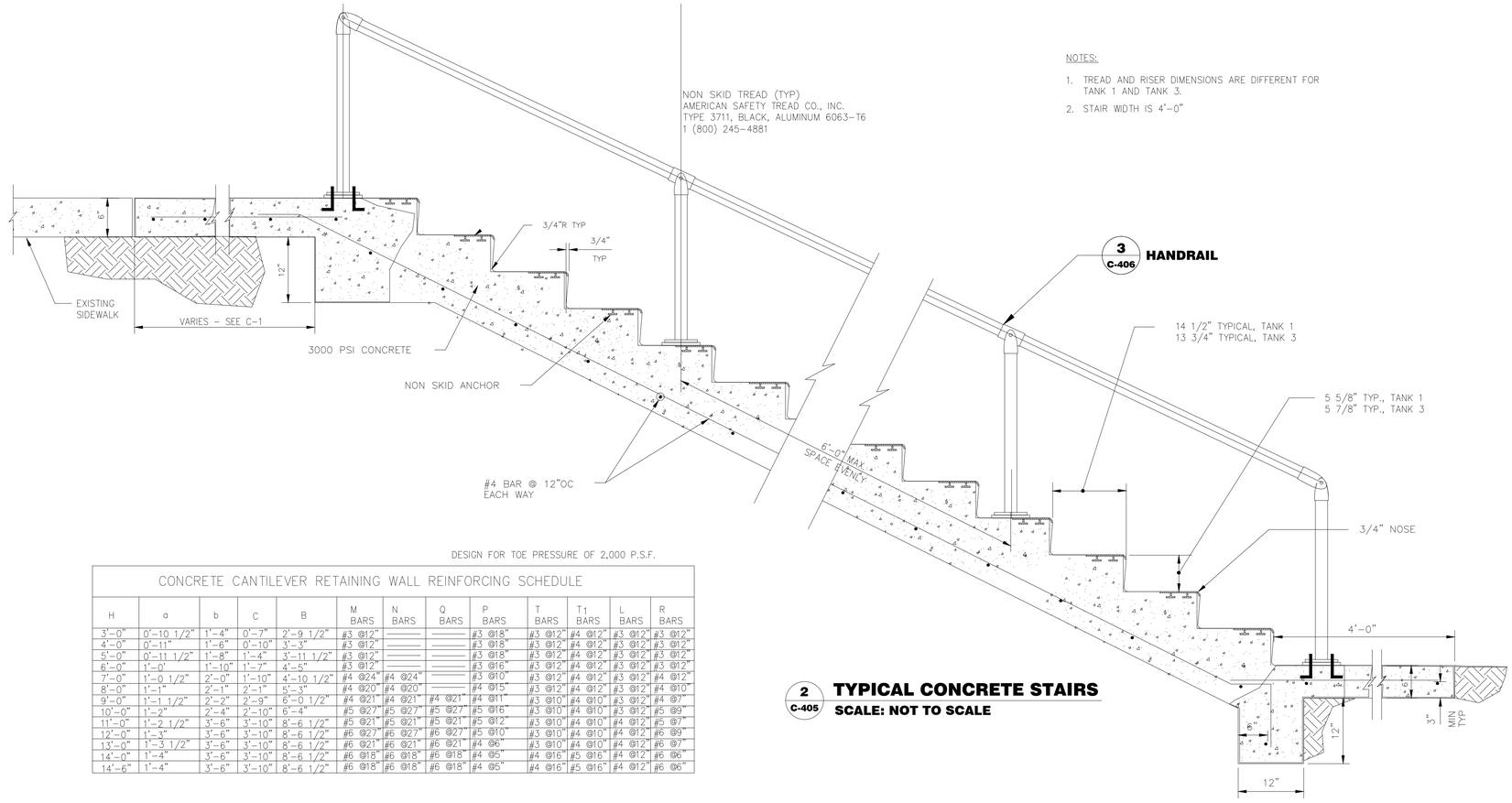

NOTES:

1. TREAD AND RISER DIMENSIONS ARE DIFFERENT FOR TANK 1 AND TANK 3.
2. STAIR WIDTH IS 4'-0"

2 C-405 TYPICAL CONCRETE STAIRS

SCALE: NOT TO SCALE

DESIGN FOR TOE PRESSURE OF 2,000 P.S.F.

CONCRETE CANTILEVER RETAINING WALL REINFORCING SCHEDULE

H	a	b	C	B	M BARS	N BARS	Q BARS	P BARS	T BARS	T1 BARS	L BARS	R BARS
3'-0"	0'-10 1/2"	1'-4"	0'-7"	2'-9 1/2"	#3 @12"	———	———	#3 @18"	#3 @12"	#4 @12"	#3 @12"	#3 @12"
4'-0"	0'-11"	1'-6"	0'-10"	3'-3"	#3 @12"	———	———	#3 @18"	#3 @12"	#4 @12"	#3 @12"	#3 @12"
5'-0"	0'-11 1/2"	1'-8"	1'-4"	3'-11 1/2"	#3 @12"	———	———	#3 @18"	#3 @12"	#4 @12"	#3 @12"	#3 @12"
6'-0"	1'-0'	1'-10"	1'-7"	4'-5"	#3 @12"	———	———	#3 @16"	#3 @12"	#4 @12"	#3 @12"	#3 @12"
7'-0"	1'-0 1/2"	2'-0"	1'-10"	4'-10 1/2"	#4 @24"	#4 @24"	———	#3 @10"	#3 @12"	#4 @12"	#3 @12"	#4 @12"
8'-0"	1'-1"	2'-1"	2'-1"	5'-3"	#4 @20"	#4 @20"	———	#4 @15"	#3 @12"	#4 @12"	#3 @12"	#4 @10"
9'-0"	1'-1 1/2"	2'-2"	2'-9"	6'-0 1/2"	#4 @21"	#4 @21"	#4 @21"	#4 @11"	#3 @10"	#4 @10"	#3 @12"	#4 @7"
10'-0"	1'-2"	2'-4"	2'-10"	6'-4"	#5 @27"	#5 @27"	#5 @27"	#5 @16"	#3 @10"	#4 @10"	#3 @12"	#5 @9"
11'-0"	1'-2 1/2"	3'-6"	3'-10"	8'-6 1/2"	#5 @21"	#5 @21"	#5 @21"	#5 @12"	#3 @10"	#4 @10"	#4 @12"	#5 @7"
12'-0"	1'-3"	3'-6"	3'-10"	8'-6 1/2"	#6 @27"	#6 @27"	#6 @27"	#5 @10"	#3 @10"	#4 @10"	#4 @12"	#6 @9"
13'-0"	1'-3 1/2"	3'-6"	3'-10"	8'-6 1/2"	#6 @21"	#6 @21"	#6 @21"	#4 @6"	#3 @10"	#4 @10"	#4 @12"	#6 @7"
14'-0"	1'-4"	3'-6"	3'-10"	8'-6 1/2"	#6 @18"	#6 @18"	#6 @18"	#4 @5"	#4 @16"	#5 @16"	#4 @12"	#6 @6"
14'-6"	1'-4"	3'-6"	3'-10"	8'-6 1/2"	#6 @18"	#6 @18"	#6 @18"	#4 @5"	#4 @16"	#5 @16"	#4 @12"	#6 @6"

CONTROL JOINTS AT INTERVALS NOT EXCEEDING 30 FEET (INTERRUPT EVER OTHER HORIZONTAL REBAR 3" EACH SIDE OF EACH JOINT).

1" EXPANSION JOINTS AT INTERVALS NOT EXCEEDING 90 FEET (EVERY THIRD CONTROL JOINT).

JOINTS SHALL NOT BE PLACED IN FOOTINGS.

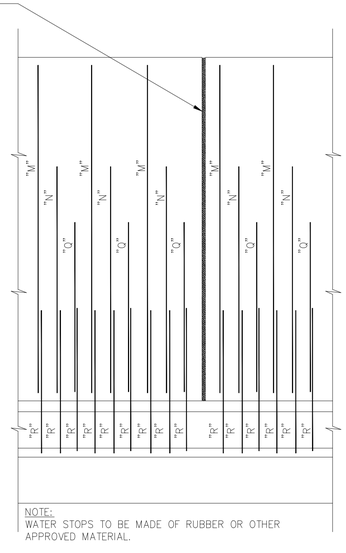

NOTE:
WATER STOPS TO BE MADE OF RUBBER OR OTHER APPROVED MATERIAL.

ELEVATION

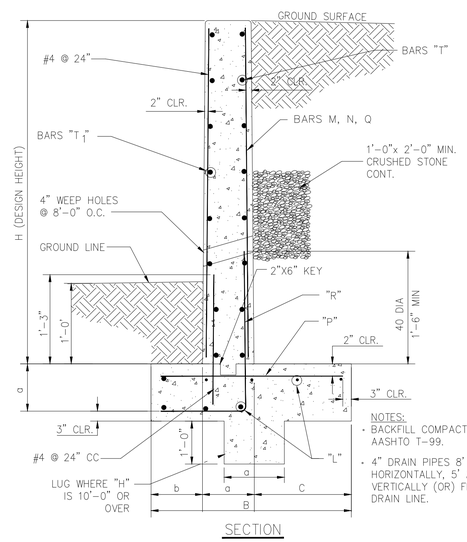

NOTES:
- BACKFILL COMPACTED TO AASHTO T-99.
- 4" DRAIN PIPES 8' APART HORIZONTALLY, 5' APART VERTICALLY (OR) FRENCH DRAIN LINE.

SECTION

1 C-405 CONCRETE CANTILEVER RETAINING WALL

SCALE: NOT TO SCALE

PRIME
A Stratus Team Company
5715 NORTHSIDE PARKWAY NW
BUILDING 300, SUITE 200
ATLANTA, GEORGIA 30327
404-425-7100

PROJECT:
DALTON PICKLEBALL COMPLEX
904 CIVIC DR,
DALTON, GA 30721

PREPARED FOR:
CITY OF DALTON, GA

REVISIONS

NO.	DATE	DESCRIPTION

SEAL

GEORGIA REGISTERED PROFESSIONAL ENGINEER No. PE044235 KATHRYN D. SHERMAN

DATE: 08/09/2024

© 2024 PRIME ENGINEERING, INC. Scales, as stated hereon, are valid on the original drawing; the dimensions of which are 24 by 36 inches. These scales, noted hereon, are hereby changed by the ratio of the overall sheet dimensions of the print to corresponding dimensions of the original drawing. This drawing is the property of PRIME ENGINEERING, INCORPORATED and is not to be reproduced or copied in whole or in part. It is only to be used for the project and site specifically identified herein and is not to be used on any other project. It is to be returned upon request.

DRAWING TITLE

CONSTRUCTION DETAILS

DRAWING DATE 08/09/2024	DRAWN BY SY		
DRAWING SCALE AS NOTED	DESIGNED BY KDS		
PROJECT NUMBER 2024-0283	CHECKED BY KLK		
DRAWING NUMBER C-405			NOT ISSUED FOR CONSTRUCTION

R:\A-Z\City of Dalton, GA\2024-0283 Dalton-Pickleball Complex\3 ENGINEERING\Drawings\C-401 - CONSTRUCTION DETAILS - 2024-0283.dwg Thu, 08/08/24 10:55 AM

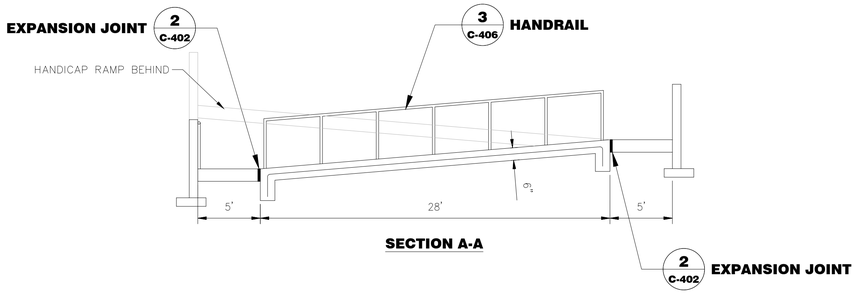

SECTION A-A

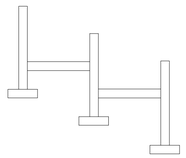

SECTION B-B

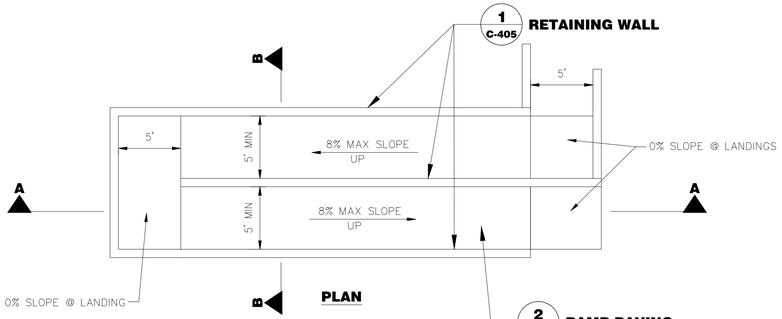

1 C-406 ADA RAMP (TYPICAL)
SCALE: NOT TO SCALE

CONTRACTOR TO PROVIDE DETECTABLE WARNINGS AND 12" HAND RAIL EXTENSIONS ON ALL RAMPS

SIDEWALK WIDTH (FT.)	JOINT SPACING (FT.)	
	A	B
5	5	50

* :LONGITUDINAL CONTRACTION JOINT REQUIRED.

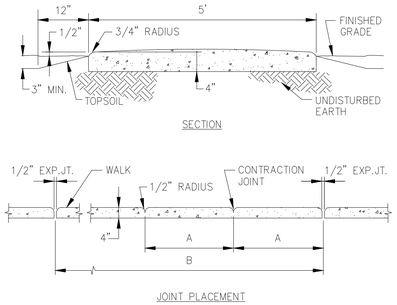

2 C-406 RAMP PAVING
SCALE: NOT TO SCALE

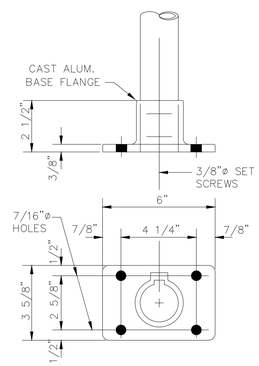

NOTE:
LOCATE SET SCREWS IN BASE FLANGE AT 90° FROM CENTERLINE OF H.R. RUN AND ON SIDE AWAY FROM WALKING SURFACE.

5 C-406 HANDRAIL MOUNTING DETAIL
SCALE: NOT TO SCALE

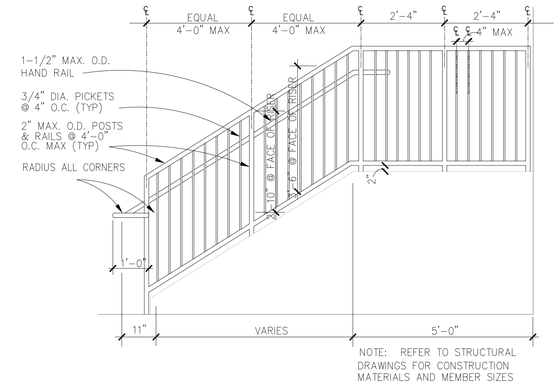

NOTE: REFER TO STRUCTURAL DRAWINGS FOR CONSTRUCTION MATERIALS AND MEMBER SIZES

3 C-406 HANDRAIL DETAIL
SCALE: NOT TO SCALE

PRIME
A Stratus Team Company
5715 NORTHSIDE PARKWAY NW
BUILDING 300, SUITE 200
ATLANTA, GEORGIA 30327
404-425-7100

PROJECT:
DALTON PICKLEBALL COMPLEX
904 CIVIC DR,
DALTON, GA 30721

PREPARED FOR:
CITY OF DALTON, GA

REVISIONS

NO.	DATE	DESCRIPTION

SEAL

GEORGIA REGISTERED No. PE044235 PROFESSIONAL ENGINEER KATHRYN D. SHEPARD

DATE: 08/09/2024

© 2024 PRIME ENGINEERING, INC. Scales, as stated hereon, are valid on the original drawing; the dimensions of which are 24 by 36 inches. These scales, noted hereon, are hereby changed by the ratio of the overall sheet dimensions of the print to corresponding dimensions of the original drawing. This drawing is the property of PRIME ENGINEERING, INCORPORATED and is not to be reproduced or copied in whole or in part. It is only to be used for the project and site specifically identified herein and is not to be used on any other project. It is to be returned upon request.

DRAWING TITLE

CONSTRUCTION DETAILS

DRAWING DATE 08/09/2024	DRAWN BY SY	
DRAWING SCALE AS NOTED	DESIGNED BY KDS	
PROJECT NUMBER 20240283	CHECKED BY KLK	
DRAWING NUMBER C-406		

NOT ISSUED FOR CONSTRUCTION

R:\A-Z\City of Dalton, GA\2024-0283 Dalton-Pickleball Complex\3 ENGINEERING\Drawings\C-401 - CONSTRUCTION DETAILS - 2024-0283.dwg Thu, 08/08/24 10:55 AM

PROJECT SITE INFORMATION

DESIGN PROFESSIONAL LEVEL II CERTIFICATION

(#2)
NAME: KATIE STRICKLAND, P.E.
LEVEL II CERT. #: 087240
EXPIRATION: 03/15/25
PHONE NUMBER: (404) 425-7100

24 HOUR CONTACT

(#4)
NAME: P. ANDREW PARKER, P.E.
PHONE NUMBER: 706-529-2404

PRIMARY PERMITEE CONTACT INFORMATION

(#5)
NAME: P. ANDREW PARKER, P.E.
PHONE NUMBER: 706-529-2404
ADDRESS: 300 W. WAUGH ST
DALTON, GA, 30722
APARKER@DALTONGA.GOV

PROJECT AREA:

(#6)
TOTAL PROJECT AREA = ±8.13 AC ACRES
TOTAL DISTURBED AREA = ±2.56 AC ACRES

PROJECT LOCATION:

ADDRESS OR INTERSECTION: 904 CIVIC DR
DALTON, GEORGIA 30721
LAND LOT: 180
DISTRICT: 12TH

PROJECT DESCRIPTION:

THE PROPOSED CONSTRUCTION CONSISTS OF A PICKLEBALL COMPLEX COMPRISING OF PICKLEBALL COURTS AND A BUILDING. THE SITE IS LOCATED IN LAND LOT 180 OF THE 12TH DISTRICT, CITY OF DALTON, WHITFIELD COUNTY, GEORGIA.

EXISTING SITE CONDITIONS:

THE PROJECT AREA CONSISTS OF UNDEVELOPED TO RURAL RESIDENTIAL, HEAVILY WOODED AND GRASSED AREAS, AND AN EXISTING TWO LANE RURAL ROADWAY.

ADJACENT PROPERTIES:

THE ADJACENT PROPERTIES CONSIST OF RESIDENTIAL LAND TO THE NORTH AND EAST, RECREATIONAL LAND TO THE WEST, AND COMMERCIAL/RESIDENTIAL LAND TO THE SOUTH..

DRAINAGE BASIN:

THE RECEIVING WATERS ARE UNNAMED TRIBUTARY OF LOWER MILL CREEK, LOCATED IN THE COOSA RIVER BASIN.

TMDL IMPLEMENTATION PLAN:
TMDL FOR LOWER MILL CREEK COMPLETED BIO F 2009.

NATURE OF CONSTRUCTION ACTIVITIES/PROPOSED SITE CONDITIONS:

(#9) THE PURPOSE OF THIS PROJECT IS TO CONSTRUCT NEW PICKLEBALL COURTS AND BUILDING FOR A NEW PICKLEBALL COMPLEX.

GPS LOCATION OF CONSTRUCTION EXIT:

(#7)
LAT: N34.783558°
LONG: W84.958313°

CRITICAL/SENSITIVE AREAS & BUFFERED STATE WATERS:

THERE ARE BUFFERED STATE WATERS LOCATED WITHIN THE PROJECT AREA OR WITHIN 200 FT OF THE PROJECT.

(#15) NON-EXEMPT ACTIVITIES SHALL NOT BE CONDUCTED WITHIN THE 25 OR 50-FOOT UNDISTURBED STREAM BUFFERS AS MEASURED FROM THE POINT OF WRESTED VEGETATION OR WITHIN 25-FEET OF THE COASTAL MARSHLAND BUFFER AS MEASURED FROM THE JURISDICTIONAL DETERMINATION LINE WITHOUT FIRST ACQUIRING THE NECESSARY VARIANCES AND PERMITS. STREAM BUFFER VARIANCE FOR THE RE-ROUTING OF THE EXISTING STREAM ON THE NORTH-NORTHEASTERN PORTION OF THE SITE IS IN PROGRESS.

EXCEPT AS PROVIDED IN PART IV.(III). IN THE NPDES PERMIT, NO CONSTRUCTION ACTIVITIES SHALL BE CONDUCTED WITHIN A 25 FOOT BUFFER ALONG THE BANKS OF ALL STATE WATERS, AS MEASURED HORIZONTALLY FROM THE POINT WHERE VEGETATION HAS BEEN WRESTED BY NORMAL STREAM FLOW OR WAVE ACTION, EXCEPT WHERE THE DIRECTOR HAS DETERMINED TO ALLOW A VARIANCE THAT IS AT LEAST AS PROTECTIVE OF NATURAL RESOURCES AND THE ENVIRONMENT IN ACCORDANCE WITH THE PROVISIONS OF O.C.G.A. 12-7-6, OR WHERE A DRAINAGE STRUCTURE OR A ROADWAY DRAINAGE STRUCTURE MUST BE CONSTRUCTED, PROVIDED THAT ADEQUATE EROSION CONTROL MEASURES ARE INCORPORATED IN THE PROJECT PLANS AND SPECIFICATIONS AND ARE IMPLEMENTED, OR ALONG ANY EPHEMERAL STREAM, OR WHERE BULKHEADS AND SEAWALLS MUST BE CONSTRUCTED TO PREVENT THE EROSION OF THE SHORELINE ON LAKE OCONEE AND LAKE SINCLAIR. THE BUFFER SHALL NOT APPLY TO THE ACTIVITIES LISTED IN PART IV.(I). OF THE NPDES PERMIT PROVIDED THAT ADEQUATE EROSION CONTROL MEASURES ARE INCORPORATED INTO THE PROJECT PLANS AND SPECIFICATIONS ARE IMPLEMENTED.

NO CONSTRUCTION ACTIVITIES SHALL BE CONDUCTED WITHIN A 50 FOOT BUFFER, AS MEASURED HORIZONTALLY FROM THE POINT WHERE VEGETATION HAS BEEN WRESTED BY NORMAL STREAM FLOW OR WAVE ACTION, ALONG THE BANKS OF ANY STATE WATERS CLASSIFIED AS 'TROUT STREAMS' EXCEPT WHEN APPROVAL IS GRANTED BY THE DIRECTOR FOR ALTERNATE BUFFER REQUIREMENTS IN ACCORDANCE WITH THE PROVISIONS OF O.C.G.A. 12-7-6, OR WHERE A ROADWAY DRAINAGE STRUCTURE MUST BE CONSTRUCTED; PROVIDED, HOWEVER, THAT SMALL SPRINGS AND STREAMS CLASSIFIED AS 'TROUT STREAMS' WHICH DISCHARGE AN AVERAGE ANNUAL FLOW OF 25 GALLONS PER MINUTE OR LESS SHALL HAVE A 25 FOOT BUFFER OR THEY MAY BE PIPED, AT THE DISCRETION OF THE PERMITTEE, PURSUANT TO THE TERMS OF A RULE PROVIDING FOR A GENERAL VARIANCE PROMULGATED BY THE BOARD OF NATURAL RESOURCES INCLUDING NOTIFICATION OF SUCH TO EPD AND THE LOCAL ISSUING AUTHORITY OF THE LOCATION AND EXTENT OF THE PIPING AND PRESCRIBED METHODOLOGY FOR MINIMIZING THE IMPACT OF SUCH PIPING AND FOR MEASURING THE VOLUME OF WATER DISCHARGED BY THE STREAM. ANY SUCH PIPE MUST STOP SHORT OF THE DOWNSTREAM PERMITTEE'S PROPERTY, AND THE PERMITTEE MUST COMPLY WITH THE BUFFER REQUIREMENT FOR ANY ADJACENT TROUT STREAMS. THE BUFFER SHALL NOT APPLY TO THE ACTIVITIES LISTED IN PART IV.(II). OF THE NPDES PERMIT PROVIDED THAT ADEQUATE EROSION CONTROL MEASURES ARE INCORPORATED INTO THE PROJECT PLANS AND SPECIFICATIONS ARE IMPLEMENTED.

EXCEPT AS PROVIDED IN PART IV.(I). AND (II). OF THE NPDES PERMIT, FOR BUFFERS REQUIRED PURSUANT TO PART IV.(I). AND (II)., NO CONSTRUCTION ACTIVITIES SHALL BE CONDUCTED WITHIN A BUFFER AND A BUFFER SHALL REMAIN IN ITS NATURAL, UNDISTURBED, STATE OF VEGETATION UNTIL ALL LAND DISTURBING ACTIVITIES ON THE CONSTRUCTION SITE ARE COMPLETED. DURING COVERAGE UNDER THIS PERMIT, A BUFFER CANNOT BE THINNED OR TRIMMED OF VEGETATION AND A PROTECTIVE VEGETATIVE COVER MUST REMAIN TO PROTECT WATER QUALITY AND AQUATIC HABITAT AND A NATURAL CANOPY MUST BE LEFT IN SUFFICIENT QUANTITY TO KEEP SHADE ON THE STREAM BED.

STREAM IMPAIRMENT:

THIS SITE DOES DRAIN INTO AN IMPAIRED STREAM. ANY CONSTRUCTION ACTIVITY WHICH DISCHARGES STORM WATER INTO AN IMPAIRED STREAM SEGMENT, OR WITHIN 1 LINEAR MILE UPSTREAM OF AND WITHIN THE SAME WATERSHED AS, ANY PORTION OF AN BIOTA IMPAIRED STREAM SEGMENT MUST COMPLY WITH PART III. C. OF THE PERMIT. APPENDIX 1 LISTING ALL THE BMPS THAT WILL BE USED FOR THOSE AREAS OF THE SITE WHICH DISCHARGE TO THE IMPAIRED STREAM SEGMENT IS PROVIDED ON NPDES CHECKLIST & APPENDIX 1 SHEET EC-004.

HYDROLOGIC CONDITIONS:

FROM THE UNITED STATES DEPARTMENT OF AGRICULTURE SOIL CONSERVATION SERVICE SOIL SURVEY FOR THE AREA, THE SOIL SERIES PRESENT AT THE SITE VARY. EACH OF THESE SOIL TYPES IS CLASSIFIED FOR DRAINAGE AS SHOWN IN THE SOILS CHART ON DRAWING SHEET NUMBER EC-002. WITH THE USE OF STORM WATER AND EROSION CONTROL BMPS, AN INCREASE IN STORM WATER RUNOFF WILL NOT OCCUR, A HYDRAULIC ANALYSIS IS PROVIDED. STORM WATER RUNOFF IS COLLECTED VIA STORM DRAINAGE INLETS AND PIPES LOCATED IN THE SITE THAT DIVERT THE WATER TO ONSITE DETENTION FACILITIES PRIOR TO DISCHARGING TO DOWNSTREAM WATERS.

PROJECT RUNOFF COEFFICIENTS:

(#45)
PRE-CONSTRUCTION CN: 85
POST-CONSTRUCTION CN: 90

EROSION, SEDIMENTATION, & POLLUTION CONTROL NARRATIVE

PRE-CONSTRUCTION PLANNING:

I. GENERAL:

THE INTENT OF THE EROSION, SEDIMENTATION AND POLLUTION CONTROL NARRATIVE AND PLAN IS TO MEET AND/OR EXCEED THE REQUIREMENTS FOR PREVENTING, OR CONTROLLING EROSION, SILTATION, AND POLLUTION OFF SITE. THE MEASURES INDICATED ARE THE ENGINEERS' BEST ESTIMATE OF THE REQUIREMENTS NEEDED TO MEET THE STATE REQUIREMENTS. MORE DEVICES MAY BE NEEDED DEPENDING ON THE SITE CONDITIONS, SEASONS, ETC. THE CONTRACTOR SHALL INSTALL ADDITIONAL MEASURES AS NECESSARY TO COMPLY WITH THIS INTENT AND MEET THE STATE REQUIREMENTS.

A. THIS EROSION, SEDIMENTATION, & POLLUTION CONTROL NARRATIVE WITH ALL EROSION CONTROL PLANS AND DETAILS SHALL BE KEPT AND MAINTAINED ON-SITE. ALL EROSION CONTROL MEASURES SHALL BE IN ACCORDANCE WITH EXISTING LAWS AND ORDINANCES WITHIN THE CONSTRUCTION DOCUMENTS.
THE LOCATION OF EROSION AND SEDIMENT CONTROL DEVICES ARE SHOWN ON THE PROPOSED PLANS.

B. EXISTING TOPOGRAPHY IS SHOWN ON THE PLANS AND PROFILES INCLUDED HEREIN. NO CHANGES ARE PROPOSED FOR THIS PROJECT.

(#19) **C. THE ESCAPE OF SEDIMENT FROM THE SITE SHALL BE PREVENTED BY THE INSTALLATION OF EROSION AND SEDIMENT CONTROL MEASURES AND PRACTICES PRIOR TO LAND DISTURBING ACTIVITIES.**

POTENTIAL POLLUTION SOURCES IN STORMWATER WILL BE OILS, GRITS, AUTOMOTIVE CHEMICALS AND OTHER SUSPENDED SOLIDS GENERATED DURING THE FIRST FLUSH RAINFALL ON THE PAVED AND NON-PAVED SURFACES. STORM WATER RUNOFF IS COLLECTED VIA STORM WATER DRAINAGE INLETS AND PIPES LOCATED IN THE SITE THAT DIVERT THE WATER TO AN ONSITE DETENTION POND, AN OFFSITE DETENTION POND, OR TO AN OFFSITE DRAINAGE DITCH.

D. PLANNED PHASES OF CONSTRUCTION:
1. INITIAL EROSION CONTROL BMP INSTALLATION, CLEARING, DEMOLITION, PAVEMENT REMOVAL, POND GRADING.
2. PRELIMINARY GRADING, OTHER THAN THE DETENTION POND, AND STORM WATER DRAINAGE SYSTEM INSTALLATION.
3. FINISH GRADING, CURB INSTALLATION, AND PAVEMENT INSTALLATION.

(#36) F. EROSION CONTROL MEASURES INCLUDE BUT NOT LIMITED TO:
1. MULCHING – DS1
2. TEMPORARY SEEDING – DS2
3. PERMANENT SEEDING – DS3
4. SODDING – DS4
5. SLOPE STABILIZATION – SS
6. STONE CHECK DAMS – CD-S
7. DIVERSION CHANNELS – DI
8. FILTER RINGS – FR
9. PERFORATED HALF-ROUND PIPE WITH STONE FILTER RETROFIT – RT-P
10. SILT FENCE – Sd1-S/NS
11. TEMPORARY GRAVEL CONSTRUCTION ENTRANCE – CO
12. INLET SEDIMENT TRAP (FILTER FABRIC & SUPPORTING FRAME) – SD2-F
13. INLET SEDIMENT TRAP (CURB INLET PROTECTION) – SD2-P
14. STORM DRAIN OUTLET PROTECTION – ST
15. DETENTION FACILITY SKIMMER – SK

G. SOIL SERIES AND DELINEATION FOR THIS SITE ARE SHOWN ON SHEET EC-002.

NOTE: A NOTICE OF INTENT AND A NOTICE OF TERMINATION SHALL BE FILED WITH THE GEORGIA E.P.D.

INSPECTIONS BY A QUALIFIED PERSONNEL PROVIDED BY THE PRIMARY PERMITTEE AND THE ASSOCIATED RECORDS SHALL BE KEPT ON SITE IN COMPLIANCE WITH NPDES PERMIT NO. GAR 100001.

II IMPLEMENTATION:

A. PLANNED CONSTRUCTION PHASING AND REQUIRED SPECIFIC SEDIMENT AND EROSION CONTROL MEASURES.

1. INITIAL CLEARING, DEMOLITION AND PAVEMENT REMOVAL: REMOVING TREES, DEBRIS, REMOVING PAVEMENT WILL BE THE FIRST OPERATION ON THE SITE. TO ACCOMPLISH THIS WORK EQUIPMENT AND TRUCKS WILL BE ON SITE. WORKING IN AND AROUND DITCHES, CREEKS AND WATERWAYS MAY BE REQUIRED. THE FOLLOWING WILL APPLY DURING THIS PHASE.
   - 1.a. CONSTRUCTION OF A STONE CONSTRUCTION ENTRANCE SHALL BE INSTALLED AS REQUIRED BY THE EROSION CONTROL PLAN TO PREVENT OR CONTROL SILT FROM BEING DEPOSITED ON ROADWAYS AND LEAVING THE SITE.
   - 1.b. SILT FENCES SHALL BE INSTALLED ON ALL SIDES OF THE SITE WHERE RUNOFF FROM THE AREA WILL LEAVE THE SITE OR ENTER A STREAM OR DITCH.
   - 1.c. ALL THE PROPOSED DETENTION PONDS WILL BE INSTALLED DURING THIS PHASE INCLUDING THE CORRESPONDING FILTER RINGS, SKIMMERS, AND RETROFITS. SLOPE STABILIZATION MATTING IS TO BE INSTALLED ON THE SLOPES.
   - 1.d. DIVERSION DITCHES WILL BE GRADED SO THAT SILT DOES NOT LEAVE THE SITE.
   - 1.e. TEMPORARY MULCHING AND SEEDING WILL BE APPLIED WHERE NECESSARY.
   - 1.f. ALL DEBRIS WILL BE KEPT AWAY FROM DITCHES AND STREAMS SO RUN-OFF ACCUMULATING IN THE DITCHES AND STREAMS WILL NOT CARRY DEBRIS DOWNSTREAM.
   - 1.g. ALL DITCHES AND WATERWAYS WILL BE PROTECTED TO THE EXTENT POSSIBLE.
   - 1.h. SILT FENCING, SEDIMENT TRAPS, AND CHECK DAMS SHALL BE INSTALLED WHERE SHOWN ON THE PLANS IN ACCORDANCE WITH DETAILS SHOWN TO CATCH RUNOFF AND FILTER PRIOR TO DISCHARGE FROM THE SITE.
   - 1.i. SILT FENCING SHALL BE PLACED AROUND STOCKPILE AREAS AS NECESSARY TO PREVENT OR CONTROL SILT WASH-OFF FROM THE SITE.

2. INTERMEDIATE PRELIMINARY GRADING AND STORMWATER INSTALLATION: THIS PHASE WILL BE DONE AFTER THE CLEARING PHASE. ALL PROPOSED STORMWATER PIPING AND STRUCTURES WILL BE INSTALLED. THE FOLLOWING WILL APPLY TO THIS PHASE OF CONSTRUCTION:
   - 2.a. ALL ASPECTS OF THE PREVIOUS PHASES SHALL BE MAINTAINED AS APPLICABLE.
   - 2.b. ADDITIONAL SILT FENCING SHALL BE INSTALLED AS NECESSARY TO PREVENT OR CONTROL EROSION AND SILTATION RESULTING FROM STOCKPILED EXCAVATION MATERIAL FROM UTILITY INSTALLATION OPERATIONS.
   - **2.c. ROADWAYS SHALL NOT BE USED FOR STOCKPILE AREAS.**
   - 2.d. CHECK DAMS SHALL BE INSTALLED IN DITCHES AS NECESSARY TO PREVENT OR CONTROL EROSION AND SILTATION.
   - 2.e. RIP-RAP CHECK DAMS SHALL BE INSTALLED IN ALL NEWLY CONSTRUCTED DITCHES AND SWALES AS NECESSARY TO PREVENT OR CONTROL EROSION AND SILTATION.
   - 2.f. INLET SEDIMENT TRAPS ARE TO BE INSTALLED AROUND ALL STORM STRUCTURES AFTER THEY HAVE BEEN INSTALLED.
   - 2.g. ADDITIONAL SLOPE STABILIZATION MATTING IS TO BE INSTALLED ON GRADING MEETING OR EXCEEDING A 3:1 SLOPE.
   - 2.h. TEMPORARY MULCHING AND SEEDING WILL BE APPLIED WHERE NECESSARY.

3. FINAL FINISH GRADING, PICKLEBALL COURT AND BUILDING INSTALLATION: THIS IS THE WRAP-UP STAGE WHEN ALL TEMPORARY SEDIMENT AND EROSION CONTROL MEASURES WILL BE PHASED OUT. THE FOLLOWING WILL APPLY TO THIS PHASE:
   - 3.f. ALL FACILITIES FROM PHASE 1 THROUGH PHASE 2 WILL BE MAINTAINED AS APPROPRIATE AND REMOVED WHEN NEED NO LONGER EXISTS.
   - 3.g. SILT TRAPS AROUND DRAINAGE INLETS WILL BE MAINTAINED, MODIFIED AS NECESSARY AND REMOVED WHEN NEED NO LONGER EXISTS.
   - 3.h. SILT FENCES SHALL BE IN PLACE AT THE TOE OF ALL FILL SLOPES.
   - 3.i. SLOPES (CUT AND FILL) 3:1 OR STEEPER THAT ARE CONSTRUCTED IN THE FINAL CONFIGURATION SHALL BE PROTECTED WITH GEOTEXTILE MATTING, GRASSED, AND MULCHED AS SHOWN ON THE PLANS AS GRADING IS COMPLETED SO VEGETATION CAN PROTECT THE SLOPE.
   - 3.j. ALL AREAS NOT RECEIVING PAVEMENT SHALL BE GRASSED PER PLAN, OR HAVE LANDSCAPING, MULCHING AND OR SOD INSTALLED AS APPLICABLE.

4. NON-EXEMPT ACTIVITIES SHALL NOT BE CONDUCTED WITHIN THE 25 OR 50 FT. UNDISTURBED BUFFER AS MEASURED FROM THE POND OF WRESTED VEGETATION WITHOUT FIRST ACQUIRING THE NECESSARY VARIANCES AND PERMITS.

B. LANDSCAPING/SEEDING:

(#21) **ANY DISTURBED AREA LEFT EXPOSED FOR A PERIOD GREATER THAN 14 DAYS SHALL BE STABILIZED WITH MULCH OR TEMPORARY SEEDING.** GRASSING OPERATIONS SHALL BE DONE THROUGHOUT CONSTRUCTION PROCESS AT THOSE TIMES WHEN PORTIONS OF THE SITE ARE FINISHED AND READY FOR PERMANENT GROUND COVER. THIS WILL REQUIRE MULTIPLE EFFORTS BY THE CONTRACTOR TO STABILIZE ALL IMPACTED AREAS OF THE SITE IN AN ORDERLY FASHION. TEMPORARY STABILIZATION MEASURES SUCH AS MULCH OR TEMPORARY SEEDING SHALL BE REQUIRED FOR ALL AREAS WHERE CONSTRUCTION ACTIVITIES HAVE CEASED FOR 14 DAYS OR MORE. CONTRACTOR SHALL MATCH EXISTING AND/OR ADJACENT GROUND COVER.

SEEDING SCHEDULE:

REFER TO THE SEEDING SCHEDULE FOR THE INSTALLATION OF LIME, FERTILIZER, SEED AND MULCH.

1. ALL DISTURBED AREAS SHALL RECEIVE GRASSING. REPLACE EXISTING GRASS/SOD IN KIND OR AS INDICATED ON THE PLANS USING PROPER APPLICATION. ALL OTHER AREAS SHALL RECEIVE GRASSING IN ACCORDANCE WITH THE SEEDING SCHEDULE SHOWN ON EROSION CONTROL DETAILS WITHIN THIS PLAN SET.
2. AFTER SEEDING, FIRM THE SEEDS INTO THE TOP 1/4" OF SOIL. MULCH IMMEDIATELY AFTER SEEDING WITH EITHER STRAW, HAY OR WOOD CELLULOSE FIBER. STRAW OR HAY SHALL BE APPLIED AT A RATE OF 100 LBS/1000 S.F.. HAY OR STRAW SHALL BE ANCHORED WITH AN ADHESIVE. WATER AS NEEDED TO ESTABLISH SEEDLINGS.

STABILIZATION MEASURES. A DESCRIPTION OF INTERIM AND PERMANENT STABILIZATION MEASURES, INCLUDING SITE-SPECIFIC SCHEDULING OF THE IMPLEMENTATION OF THE MEASURES. THE EROSION CONTROL PLANS WITHIN THIS PLANS SET GIVE DIRECTION TO ENSURE THAT EXISTING VEGETATION IS PRESERVED AND THAT DISTURBED PORTIONS OF THE SITE ARE STABILIZED. STABILIZATION MEASURES MAY INCLUDE: TEMPORARY SEEDING, PERMANENT SEEDING, MULCHING, GEOTEXTILES, SOD STABILIZATION, VEGETATIVE BUFFER STRIPS, PROTECTION OF TREES, PRESERVATION OF MATURE VEGETATION, AND OTHER APPROPRIATE MEASURES. A RECORD OF THE DATES WHEN MAJOR GRADING ACTIVITIES

(#26) OCCUR, WHEN CONSTRUCTION ACTIVITIES TEMPORARILY OR PERMANENTLY CEASE ON A PORTION OF THE SITE, AND WHEN STABILIZATION MEASURES ARE INITIATED ARE INCLUDED WITHIN THIS PLAN SET. EXCEPT AS PROVIDED IN PARAGRAPHS A.A. AND A.B. BELOW, **STABILIZATION MEASURES SHALL BE INITIATED AS SOON AS PRACTICABLE IN PORTIONS OF THE SITE WHERE CONSTRUCTION ACTIVITIES HAVE TEMPORARILY OR PERMANENTLY CEASED, BUT IN NO CASE MORE THAN 14 DAYS AFTER THE CONSTRUCTION ACTIVITY IN THAT PORTION OF THE SITE HAS TEMPORARILY OR PERMANENTLY CEASED.**

A.A. WHERE THE INITIATION OF STABILIZATION MEASURES BY THE 14TH DAY AFTER CONSTRUCTION ACTIVITY TEMPORARILY OR PERMANENTLY CEASE IS PRECLUDED BY SNOW COVER OR OTHER ADVERSE WEATHER CONDITIONS, STABILIZATION MEASURES SHALL BE INITIATED AS SOON AS PRACTICABLE.

A.B. WHERE CONSTRUCTION ACTIVITY WILL RESUME ON A PORTION OF THE SITE WITHIN 21 DAYS FROM WHEN ACTIVITIES CEASED, (E.G., THE TOTAL TIME PERIOD THAT CONSTRUCTION ACTIVITY IS TEMPORARILY CEASED IS LESS THAN 21 DAYS) THEN STABILIZATION MEASURES DO NOT HAVE TO BE INITIATED ON THAT PORTION OF SITE BY THE 14TH DAY AFTER CONSTRUCTION ACTIVITY TEMPORARILY CEASED.

B. MAINTENANCE INSTRUCTIONS:

ALL EROSION AND SEDIMENT CONTROL FACILITIES SHALL BE INSPECTED AT THE END OF EACH WORKING DAY, AT A MINIMUM ONCE EVERY 7 DAYS IF CONSTRUCTION ACTIVITIES HAVE CEASED, AND WITHIN 24 HOURS AFTER EACH RAINFALL EVENT. ANY DAMAGED OR NON-FUNCTIONAL FACILITY SHALL BE REPAIRED IMMEDIATELY. ALL INSPECTION AND MAINTENANCE RECORDS SHALL BE KEPT ON-SITE. INSPECTION AND MAINTENANCE ACTIVITIES INCLUDE BUT ARE NOT LIMITED TO THE FOLLOWING.

1. SEDIMENT TRAPS WILL BE CHECKED FOR SEDIMENT CLEANOUT. SEDIMENT SHALL BE REMOVED AND THE TRAP RESTORED TO ITS ORIGINAL DIMENSIONS WHEN THE SEDIMENT HAS ACCUMULATED TO ONE-HALF (1/2) THE DESIGN VOLUME OF THE WET STORAGE. SEDIMENT REMOVED FROM THE TRAP SHALL BE DEPOSITED IN SUITABLE AREAS AND IN SUCH A MANNER THAT IT WILL NOT ERODE AND CAUSE SEDIMENTATION PROBLEMS.
2. RIPRAP OUTLETS, ROCK FILTER DAMS, AND CHECK DAMS WILL BE CHECKED FOR SEDIMENT BUILDUP WHICH WILL PREVENT DRAINAGE. IF THE RIPRAP IS CLOGGED BY SEDIMENT, IT SHALL BE REMOVED AND CLEANED OR REPLACED. SEDIMENT SHALL BE REMOVED WHEN IT REACHES 1/2 OF THE ORIGINAL HEIGHT OF THE CHECK DAM OR ROCK FILTER DAM.
3. SILT FENCE BARRIERS WILL BE CHECKED FOR UNDERMINING OR DETERIORATION OF THE FABRIC. SEDIMENT SHALL BE REMOVED WHEN THE LEVEL OF SEDIMENT DEPOSITION REACHES HALF WAY TO THE TOP OF THE BARRIER.
4. TEMPORARY DIVERSIONS AND DOWNDRAIN STRUCTURES SHALL BE INSPECTED FOR DAMAGES DUE TO RAINFALL AND REPAIRED AS NECESSARY.
5. SEEDED AREAS WILL BE CHECKED TO ENSURE THAT A COMPLETE AND ADEQUATE COVER IS MAINTAINED. AREAS SHOULD BE FERTILIZED AND RESEEDED AS NEEDED.
6. IF ANY FACILITY IS DAMAGED DURING MAINTENANCE, OR OTHERWISE, THE DAMAGED PORTION SHALL BE REMOVED AND REPLACED ACCORDING TO THE INDICATED DETAIL.
7. IF SILT HAS CLOGGED SEDIMENT CONTROL FACILITY AND IT IS NO LONGER EFFECTIVE IN FILTERING SILT, THE STRUCTURE SHALL BE REMOVED AND REPLACED WITH A NEW STRUCTURE IN ACCORDANCE WITH APPLICABLE DETAIL.
8. CONSTRUCTION ENTRANCE SHALL HAVE ADDITIONAL STONE ADDED AS MUD COVERS STONE. DURING MUDDY TIMES, TIRES SHALL BE WASHED PRIOR TO GOING INTO THE STREET.
9. WHEN SEDIMENT IS TRANSPORTED ONTO A PAVED ROAD SURFACE, THE ROAD WILL BE CLEANED THOROUGHLY AT THE END OF EACH DAY. SEDIMENT WILL BE REMOVED FROM THE ROAD BY SHOVEL AND SWEEPING AND TRANSPORTED TO A SEDIMENT CONTROL DISPOSAL AREA.
10. (#20) **EROSION CONTROL MEASURES WILL BE MAINTAINED AT ALL TIMES. IF FULL IMPLEMENTATION OF THE APPROVED PLAN DOES NOT PROVIDE FOR EFFECTIVE EROSION CONTROL, ADDITIONAL EROSION AND SEDIMENT CONTROL MEASURES SHALL BE IMPLEMENTED TO CONTROL OR TREAT THE SEDIMENT SOURCE.**

C. MAINTAINING EFFECTIVENESS:

CONTRACTOR SHALL INSPECT OVERALL PERFORMANCE OF EROSION AND SEDIMENT CONTROL FACILITIES AND AREAS DOWNSTREAM. IF SILT IS APPARENT DOWNSTREAM FROM STRUCTURES, IMMEDIATELY INSPECT ALL STRUCTURAL MEASURES. IF SEDIMENT IS OBSERVED DOWNSTREAM, NOTIFY THE ENGINEER, AND THE ENGINEER WILL INSPECT THE CONDITION AND DIRECT THE REMOVAL OF ACCUMULATED SEDIMENT DOWNSTREAM AND ADD ADDITIONAL STRUCTURAL MEASURES AS NECESSARY. CONTRACTOR SHALL IMPLEMENT RECOMMENDED SOLUTIONS TO PROBLEM AREAS AS RECOMMENDED.

III. COMPLETION:

A. PROJECT CLOSE OUT: THE FOLLOWING SHALL BE DONE AT THE END OF THE PROJECT.

1. INSPECT SITE TO BE SURE THAT GROUND COVER IS COMPLETE AND ADEQUATE. IN OTHER WORDS, ALL AREAS ARE EITHER PAVED OR HAVE COMPLETE AND ADEQUATE GROUND COVER WITH NO EROSION APPARENT. COMPLETE AND ADEQUATE GROUND COVERAGE OF VEGETATION IS DEFINED AS 70% VEGETATIVE COVER WITH NO AREAS OF EROSION APPARENT.
2. IF ABOVE INSPECTION IS MADE AND APPROVED, ALL STRUCTURAL FACILITIES SHALL BE REMOVED ALONG WITH ANY ACCUMULATED SILT. THE AREAS DISTURBED BY REMOVAL OF STRUCTURES SHALL BE FINE GRADED, GRASSED AND MULCHED.
3. IF INSPECTION IS MADE AND PROBLEMS EXIST, RESOLVE THE PROBLEM, MAKE THE REPAIR, AND MAKE SUBSEQUENT INSPECTION PRIOR TO REMOVAL.

IV. MISCELLANEOUS ISSUES:

(#25) A. PETROLEUM BASED PRODUCTS – CONTAINERS FOR PRODUCTS SUCH AS FUELS, LUBRICANTS AND TARS WILL BE INSPECTED DAILY FOR LEAKS AND SPILLS. THIS INCLUDES ON-SITE VEHICLE AND MACHINERY DAILY INSPECTIONS AND REGULAR PREVENTATIVE MAINTENANCE OF SUCH EQUIPMENT. EQUIPMENT MAINTENANCE AREAS WILL BE LOCATED AWAY FROM STATE WATER, NATURAL DRAINS AND STORM WATER DRAINAGE INLETS. IN ADDITION, TEMPORARY FUELING TANKS SHALL HAVE A SECONDARY CONTAINMENT LINER TO PREVENT/MINIMIZE SITE CONTAMINATION. DISCHARGE OF OILS, FUELS AND LUBRICANTS IS PROHIBITED. PROPER DISPOSAL METHODS WILL INCLUDE COLLECTION IN A SUITABLE CONTAINER AND DISPOSAL AS REQUIRED BY LOCAL AND STATE REGULATIONS.

B. PAINTS/FINISHES/SOLVENTS – ALL PRODUCTS WILL BE STORED IN TIGHTLY SEALED ORIGINAL CONTAINERS WHEN NOT IN USE. EXCESS PRODUCT WILL NOT BE DISCHARGED TO THE STORM WATER COLLECTION SYSTEM. EXCESS PRODUCT, MATERIALS USED WITH THESE PRODUCTS AND PRODUCT CONTAINERS WILL BE DISPOSED OF ACCORDING TO MANUFACTURER'S SPECIFICATIONS AND RECOMMENDATIONS.

(#24) C. CONCRETE TRUCK WASHING – NO CONCRETE TRUCKS WILL BE ALLOWED TO WASH OUT OR DISCHARGE SURPLUS CONCRETE OR DRUM WASH WATER ONSITE.

D. FERTILIZER/HERBICIDES – THESE PRODUCTS WILL BE APPLIED AT RATES THAT DO NOT EXCEED THE MANUFACTURER'S SPECIFICATIONS OR ABOVE THE GUIDELINES SET FORTH IN THE CROP ESTABLISHMENT OR IN THE GSWCC MANUAL FOR EROSION AND SEDIMENT CONTROL IN GEORGIA. ANY STORAGE OF THESE MATERIALS WILL BE UNDER ROOF IN SEALED CONTAINERS.

E. BUILDING MATERIALS – NO BUILDING OR CONSTRUCTION MATERIALS WILL BE BURIED OR DISPOSED OF ONSITE. ALL SUCH MATERIAL WILL BE DISPOSED OF IN PROPER WASTE DISPOSAL PROCEDURES.

F. ALL WATER SUPPLY WILL BE PROVIDED FROM PUBLIC WATER SUPPLY.

G. DUST SUPPRESSION OPERATIONS WILL BE DONE BY MEANS OF A WATER TRUCK SPRAYING WATER ON THE SURFACE OF THE SITE.

H. TEMPORARY/PORTABLE TOILET FACILITIES SHALL BE LOCATED ON SITE AS NECESSARY TO AVOID CONSTRUCTION ACTIVITIES. TOILET FACILITIES SHALL BE MAINTAINED AND CLEANED TO ENSURE USAGE BY ON-SITE PERSONNEL.

(#28) I. NO WASTE WILL BE DISPOSED OF INTO STORM WATER INLETS OR WATERS OF THE STATE. ALL WASTE MATERIALS WILL BE COLLECTED AND STORED IN A SECURELY LIDDED METAL DUMPSTER. THE DUMPSTER WILL MEET ALL SOLID WASTE MANAGEMENT REGULATIONS. ALL TRASH AND CONSTRUCTION DEBRIS FROM THE SITE WILL BE DEPOSITED IN THE DUMPSTER. THE DUMPSTER WILL BE EMPTIED A MINIMUM OF ONCE PER WEEK OR MORE OFTEN IF NECESSARY AND TRASH WILL BE HAULED AS REQUIRED BY LOCAL REGULATIONS. NO CONSTRUCTION WASTE WILL BE BURIED ONSITE. ALL PERSONNEL WILL BE INSTRUCTED ON PROPER PROCEDURES FOR WASTE DISPOSAL. A NOTICE STATING THESE PRACTICES WILL BE POSTED AT THE JOBSITE AND THE CONTRACTOR WILL BE RESPONSIBLE FOR SEEING THAT THESE PROCEDURES ARE FOLLOWED. (#8)

(#27) **J. FOR BUILDING MATERIALS, BUILDING PRODUCTS, CONSTRUCTION WASTES, TRASH, LANDSCAPE MATERIALS, FERTILIZERS, PESTICIDES, HERBICIDES, DETERGENTS, SANITARY WASTE AND OTHER MATERIALS PRESENT ON SITE, PROVIDE COVER (E.G. PLASTIC SHEETING, TEMPORARY ROOFS) TO MINIMIZE THE EXPOSURE OF THESE PRODUCTS TO PRECIPITATION AND TO STORMWATER, OR A SIMILARLY EFFECTIVE MEANS DESIGNED TO MINIMIZE THE DISCHARGE OF POLLUTANTS FROM THESE AREAS. MINIMIZATION OF EXPOSURE IS NOT REQUIRED IN CASES WHERE EXPOSURE TO PRECIPITATION AND TO STORMWATER WILL NOT RESULT IN A DISCHARGE OF POLLUTANTS, OR WHERE EXPOSURE OF A SPECIFIC MATERIAL OR PRODUCT POSES LITTLE RISK TO STORMWATER CONTAMINATION (SUCH AS FINAL PRODUCTS AND MATERIALS INTENDED FOR OUTDOOR USE.**

CERTIFICATIONS:

(#13) 1. "I CERTIFY THAT THE PERMITTEE'S EROSION, SEDIMENTATION AND POLLUTION CONTROL PLAN PROVIDES FOR AN APPROPRIATE AND COMPREHENSIVE SYSTEM OF BEST MANAGEMENT PRACTICES REQUIRED BY THE GEORGIA WATER QUALITY CONTROL ACT AND THE DOCUMENT 'MANUAL FOR EROSION AND SEDIMENT CONTROL IN GEORGIA' (MANUAL) PUBLISHED BY THE STATE SOIL AND WATER CONSERVATION COMMISSION AS OF JANUARY 1 OF THE YEAR IN WHICH THE LAND-DISTURBING ACTIVITY WAS PERMITTED, PROVIDES FOR THE SAMPLING OF THE RECEIVING WATER(S) OR THE SAMPLING OF THE STORM WATER OUTFALLS AND THAT THE DESIGNED SYSTEM OF BEST MANAGEMENT PRACTICES AND SAMPLING METHODS IS EXPECTED TO MEET THE REQUIREMENTS CONTAINED IN THE GENERAL NPDES PERMIT NO. GAR 100001."

[signature] 08/09/2024 087240
NAME: KATIE STRICKLAND, PE — DATE — GSWCC LEVEL 2 CERTIFICATION NO.
EXPIRES 03/15/25

(#12) 2. "I CERTIFY UNDER PENALTY OF LAW THAT THIS PLAN WAS PREPARED AFTER A SITE VISIT TO THE LOCATIONS DESCRIBED HEREIN BY MYSELF OR MY AUTHORIZED AGENT, UNDER MY DIRECT SUPERVISION.

[signature] 08/09/2024 087240
NAME: KATIE STRICKLAND, PE — DATE — GSWCC LEVEL 2 CERTIFICATION NO.
EXPIRES 03/15/25

7-DAY INSPECTION AND REVISIONS:

(#14) 1. **THE DESIGN PROFESSIONAL WHO PREPARED THE ES&PC PLAN IS TO INSPECT THE INSTALLATION OF** THE INITIAL SEDIMENT STORAGE REQUIREMENTS AND PERIMETER CONTROL **BMPS WITHIN 7 DAYS AFTER** INSTALLATION.
2. THE CONTRACTOR IS TO NOTIFY THE PRIMARY PERMITTEE AND THE DESIGN PROFESSIONAL WHO PREPARED THE ES&PC PLAN PRIOR TO COMMENCEMENT OF CONSTRUCTION TO ENSURE THAT THE DESIGN PROFESSIONAL WHO PREPARED THE THE ES&PC PLAN CAN VISIT THE SITE AS REQUIRED WITHIN THE LEGAL TIME CONSTRAINTS

(#17) 3. **AMENDMENTS/REVISIONS TO THE ES&PC PLAN WHICH HAVE SIGNIFICANT EFFECT ON BMPS WITH A HYDRAULIC COMPONENT MUST BE CERTIFIED BY THE DESIGN PROFESSIONAL.**

PRIME
A Stratus Team Company
3715 NORTHSIDE PARKWAY NW
BUILDING 300, SUITE 200
ATLANTA, GEORGIA 30327
404-425-7100

PROJECT: DALTON PICKLEBALL COMPLEX
904 CIVIC DR, DALTON, GA 30721
PREPARED FOR: CITY OF DALTON, GA

REVISIONS NO.	DATE	DESCRIPTION

SEAL: GEORGIA REGISTERED PROFESSIONAL ENGINEER No. PE044235 KATHRYN D. STRICKLAND
DATE: 08/09/2024

© 2024 PRIME ENGINEERING, INC. Scales, as stated hereon, are valid on the original drawing; the dimensions of which are 24 by 36 inches. These scales, noted hereon, are hereby changed by the ratio of the overall sheet dimensions of the print to corresponding dimensions of the original drawing. This drawing is the property of PRIME ENGINEERING, INCORPORATED and is not to be reproduced or copied in whole or in part. It is only to be used for the project and site specifically identified herein and is not to be used on any other project. It is to be returned upon request.

DRAWING TITLE: ES&PC NOTES

DRAWING DATE	DRAWN BY
08/09/2024	SY
DRAWING SCALE: NOT TO SCALE	DESIGNED BY: KDS
PROJECT NUMBER: 2024-0283	CHECKED BY: KLK

DRAWING NUMBER: EC-001

NOT ISSUED FOR CONSTRUCTION

R:\A-Z\City of Dalton, GA\2024-0283 Dalton-Pickleball Complex\3 ENGINEERING\Drawings\EC-001 - ESPC NOTES - 2024-0283.dwg Thu, 08/08/24 10:56 AM

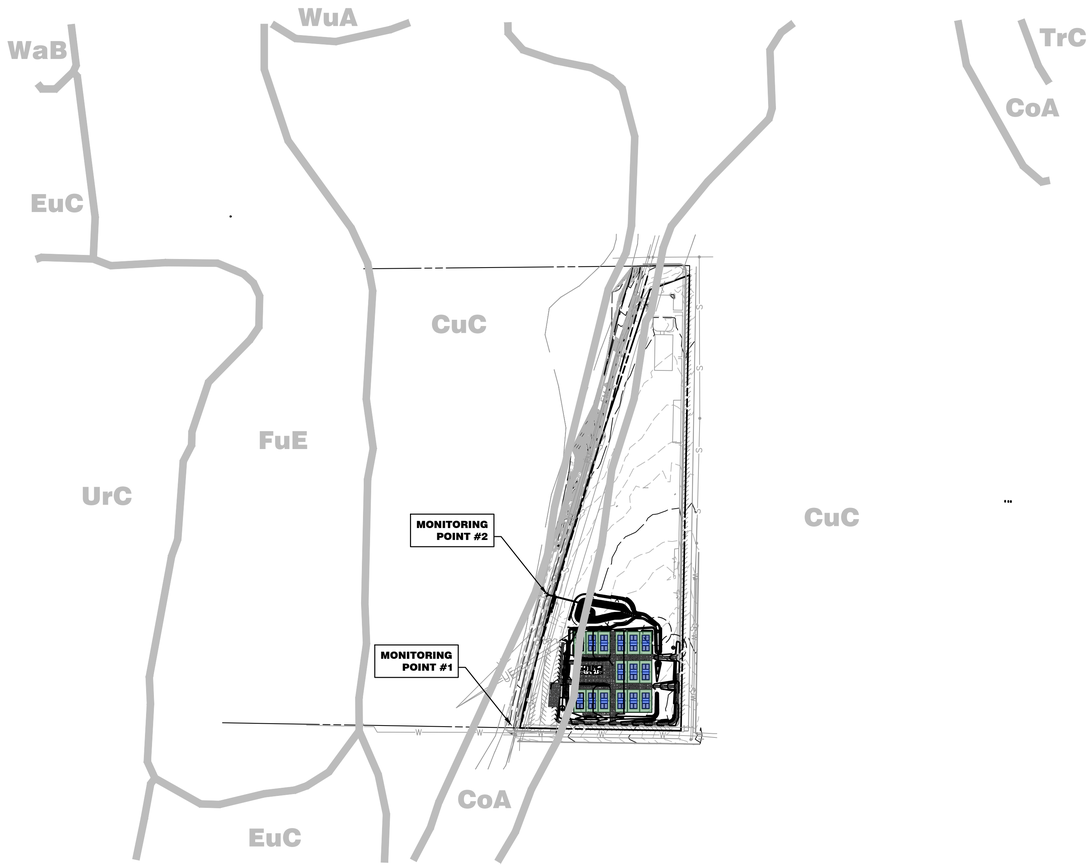

#35 #43 #44

1 EC-002 ES&PC COMPREHENSIVE MONITORING PLAN
SCALE: 1" = 200'

#34

SAMPLING INFORMATION											
NPDES MONITORING POINT	PRIMARY OR ALTERNATE SITE	NAME OF RECEIVING WATER	APPLICABLE CONSTRUCTION STAGE FOR SAMPLING	SAMPLING TYPE (OUTFALL OR RECEIVING WATER)	DRAINAGE AREA FOR THE RECEIVING WATER (MI^2)	UPSTREAM DISTURBED AREA (ACRES)	TOTAL PROJECT AREA (ACRES)	WARM OR COLD WATER STREAM	APPENDIX B NTU VALUE (OUTFALL MONITORING ONLY)	ALLOWABLE NTU INCREASE (RECEIVING WATER MONITORING ONLY)	LOCATION DESCRIPTION
1	PRIMARY	LOWER MILL CREEK	ALL	RECEIVING WATER	0.5475	0	8.13 AC	WARM	N/A	25	DRAINAGE DITCH UPSTREAM OF SITE
2	PRIMARY	LOWER MILL CREEK	ALL	OUTFALL	0.5475	2.56 AC	8.13 AC	WARM	25	N/A	OUTFALL OF DETENTION POND

SOIL MAP LEGEND

SYMBOL	UNIT NAME
CoA	CHENNEBY-URBAN LAND COMPLEX, 0-2% SLOPES, OCCASIONALLY FLOODED
CuC	CONASAUGA-URBAN LAND COMPLEX, 2-10% SLOPES
EuC	ENDERS-URBAN LAND COMPLEX, 2-15% SLOPES
FuE	FULLERTON-URBAN LAND COMPLEX, 15-30% SLOPES
TrC	TOWNLEY-URBAN LAND COMPLEX, 2-15% SLOPES
UrC	URBAN LAND, 2-10% SLOPES
WaB	WAX FINE SANDY LOAM, 2-6% SLOPES
WuA	WHITWELL-URBAN LAND COMPLEX, 0-2% SLOPES, OCCASIONALLY FLOODED

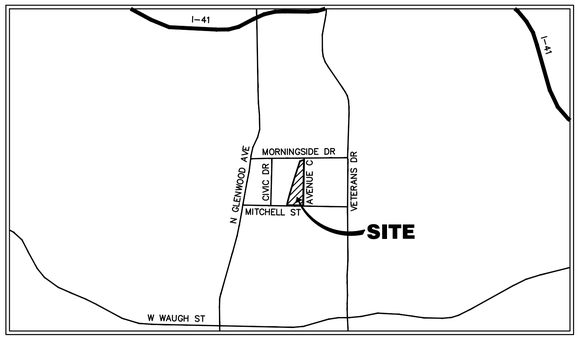

#9

2 EC-002 VICNITY MAP
SCALE: 1" = 2000'

ANTICIPATED BEGINNING OF CONSTRUCTION: 10/01/2024
ANTICIPATED END OF INITIAL CONSTRUCTION: 09/30/2025

CONSTRUCTION ACTIVITY SCHEDULE

ITEM	2024/2025 M1	M2	M3	M4	M5	M6	M7	M8	M9	M10	M11	M12
DEMOLITION FOR INITIAL BMPS	■											
INITIAL PERIMETER & SEDIMENT STORAGE BMPS	■	■										
CLEARING & GRUBBING	■											
DEMOLITION		■	■	■								
EROSION CONTROL DEVICES	■	■	■	■	■	■	■	■	■	■	■	■
GRADING								■	■	■	■	■
TEMPORARY VEGETATION	■	■	■	■	■	■	■	■	■	■	■	■
INFRASTRUCTURE CONSTRUCTION								■	■	■	■	■
BASE								■				
PAVING (BINDER)									■			
PAVING (SURFACE)									■	■	■	■
FINE GRADING & LANDSCAPING										■	■	■
PERMANENT VEGETATION										■	■	■
REMOVE TEMP. EROSION CONTROL												■
MAINTENANCE OF BMPS	■	■	■	■	■	■	■	■	■	■	■	■

#29

2 EC-002 CONSTRUCTION SCHEDULE
SCALE: N.T.S.

1. PROJECT DATA:
   SURVEYOR:
   PRIME ENGINEERING

   ENGINEER:
   PRIME ENGINEERING
   3175 NORTHSIDE PKWY NW
   BUILDING 300, SUITE 200
   ATLANTA, GA 30327

2. THE HORIZONTAL DATA SHOW HEREON IS BASED ON THE GEORGIA STATE PLANE COORDINATE SYSTEM, WEST ZONE.

3. THE ELEVATIONS SHOWN HEREON ARE NAVD88 DATUM.

"I CERTIFY THAT THE PERMITTEE'S EROSION, SEDIMENTATION AND POLLUTION CONTROL PLAN PROVIDES FOR THE MONITORING OF: (A) ALL PERENNIAL AND INTERMITTENT STREAMS AND OTHER WATER BODIES SHOWN ON THE USGS TOPOGRAPHIC MAP AND ALL OTHER FIELD VERIFIED PERENNIAL AND INTERMITTENT STREAMS AND OTHER WATER BODIES, OR (B) WHERE ANY SUCH SPECIFIC IDENTIFIED PERENNIAL OR INTERMITTENT STREAM AND OTHER WATER BODY IS NOT PROPOSED TO BE SAMPLED, I HAVE DETERMINED IN MY PROFESSIONAL JUDGEMENT, UTILIZING THE FACTORS REQUIRED IN THE GENERAL NPDES PERMIT NO. GAR 1000003, THAT THE INCREASE IN WATER TURBIDITY OF EACH SPECIFIC IDENTIFIED SAMPLED RECEIVING WATER WILL BE REPRESENTATIVE OF THE INCREASE IN THE TURBIDITY OF A SPECIFIC IDENTIFIED UN-SAMPLED RECEIVING WATER."

#42

DESIGN PROFESSIONAL — DATE: 08/09/2024

#2

KATIE STRICKLAND, P.E.
GASWCC LEVEL II
CERTIFICATION #087240
EXPIRES 03/15/2025

BUFFERED WATERS OF THE STATE DO EXIST WITHIN 200 FEET OF THE LIMITS OF DISTURBANCE

WETLANDS DO NOT EXIST WITHIN 200 FEET OF THE LIMITS OF DISTURBANCE

WETLAND CERTIFICATION:

#42

THE DESIGN PROFESSIONAL, WHOSE SEAL APPEARS HEREON, CERTIFIES THE FOLLOWING:
1. THE NATIONAL WETLAND INVENTORY MAPS HAVE BEEN CONSULTED
2. IF WETLANDS ARE INDICATED, THE LAND OWNER OF DEVELOPER HAS BEEN ADVISED THAT LAND DISTURBANCE OF PROTECTED WETLANDS SHALL NOT OCCUR UNLESS THE APPROPRIATE FEDERAL WETLANDS ALTERATIONS ("SECTION 404") PERMIT HAS BEEN OBTAINED.

GEORGIA 811 Utilities Protection Center, Inc.
Know what's below. Call before you dig.

PRIME — A Stratus Team Company
3175 NORTHSIDE PARKWAY NW
BUILDING 300, SUITE 200
ATLANTA, GEORGIA 30327
404-425-7100

PROJECT: DALTON PICKLEBALL COMPLEX
904 CIVIC DR,
DALTON, GA 30721
PREPARED FOR: CITY OF DALTON, GA

REVISIONS

NO.	DATE	DESCRIPTION

SEAL: GEORGIA REGISTERED No. PE044235 PROFESSIONAL ENGINEER KATHRYN D. STRICKLAND — DATE: 08/09/2024

© 2024 PRIME ENGINEERING, INC. Scales, as stated hereon, are valid on the original drawing; the dimensions of which are 24 by 36 inches. These scales, noted thereon, are invalid if changed by the printer of hereon, and invalid if changed of the print to corresponding dimensions of the original drawing. This drawing is the property of PRIME ENGINEERING, INCORPORATED and is not to be reproduced or copied in whole or in part. It is only to be used for the project and site specifically identified herein and is not to be used on any other project. It is to be returned upon request.

DRAWING TITLE: ES&PC COMPREHENSIVE MONITORING PLAN

DRAWN BY	SY
DESIGNED BY	KDS
CHECKED BY	KLK
DRAWING DATE	08/09/2024
DRAWING SCALE	AS NOTED
PROJECT NUMBER	2024-0283
DRAWING NUMBER	EC-002

NOT ISSUED FOR CONSTRUCTION

R:\A-Z\City of Dalton, GA\2024-0283 Dalton-Pickleball Complex\3 ENGINEERING\Drawings\EC-001 - ESPC NOTES - 2024-0283.dwg Thu, 08/08/24 10:56 AM

NPDES SITE INSPECTIONS

1. EACH DAY WHEN ANY TYPE OF CONSTRUCTION ACTIVITY HAS TAKEN PLACE AT A PRIMARY PERMITTEE'S SITE, CERTIFIED PERSONNEL PROVIDED BY THE PRIMARY PERMITTEE SHALL INSPECT: (A) ALL AREAS AT THE PRIMARY PERMITTEE'S SITE WHERE PETROLEUM PRODUCTS ARE STORED, USED, OR HANDLED FOR SPILLS AND LEAKS FROM VEHICLES AND EQUIPMENT AND (B) ALL LOCATIONS AT THE PRIMARY PERMITTEE'S SITE WHERE VEHICLES ENTER OR EXIT THE SITE FOR EVIDENCE OF OFF-SITE SEDIMENT TRACKING. THESE INSPECTIONS MUST BE CONDUCTED UNTIL A NOTICE OF TERMINATION IS SUBMITTED.
2. MEASURE RAINFALL ONCE EVERY 24 HOURS EXCEPT ANY NON-WORKING SATURDAY, NON-WORKING SUNDAY AND NON-WORKING FEDERAL HOLIDAY UNTIL A NOTICE OF TERMINATION IS SUBMITTED. MEASUREMENT OF RAINFALL MAY BE SUSPENDED IF ALL AREAS OF THE SITE HAVE UNDERGONE FINAL STABILIZATION OR ESTABLISHED A CROP OF ANNUAL VEGETATION AND A SEEDING OF TARGET PERENNIALS APPROPRIATE FOR THE REGION
3. CERTIFIED PERSONNEL (PROVIDED BY THE PRIMARY PERMITTEE) SHALL INSPECT THE FOLLOWING AT LEAST ONCE EVERY FOURTEEN (14) CALENDAR DAYS AND WITHIN 24 HOURS OF THE END OF A STORM THAT IS 0.5 INCHES RAINFALL OR GREATER (UNLESS SUCH STORM ENDS AFTER 5:00 PM ON ANY FRIDAY OR ON ANY NONWORKING SATURDAY, NON-WORKING SUNDAY OR ANY NON-WORKING FEDERAL HOLIDAY IN WHICH CASE THE INSPECTION SHALL BE COMPLETED BY THE END OF THE NEXT BUSINESS DAY AND/OR WORKING DAY, WHICHEVER OCCURS FIRST): (A) DISTURBED AREAS OF THE PRIMARY PERMITTEE'S CONSTRUCTION SITE ; {B) AREAS USED BY THE PRIMARY PERMITTEE FOR STORAGE OF MATERIALS THAT ARE EXPOSED TO PRECIPITATION ; AND (C) STRUCTURAL CONTROL MEASURES. EROSION AND SEDIMENT CONTROL MEASURES IDENTIFIED IN THE PLAN APPLICABLE TO THE PRIMARY PERMITTEE'S SITE SHALL BE OBSERVED TO ENSURE THAT THEY ARE OPERATING CORRECTLY. WHERE DISCHARGE LOCATIONS OR POINTS ARE ACCESSIBLE, THEY SHALL BE INSPECTED TO ASCERTAIN WHETHER EROSION CONTROL MEASURES ARE EFFECTIVE IN PREVENTING SIGNIFICANT IMPACTS TO RECEIVING WATER(S). FOR AREAS OF A SITE THAT HAVE UNDERGONE FINAL STABILIZATION OR ESTABLISHED A CROP OF ANNUAL VEGETATION AND A SEEDING OF TARGET PERENNIALS APPROPRIATE FOR THE REGION, THE PERMITTEE MUST COMPLY WITH PART IV.D.4.A.(4). THESE INSPECTIONS MUST BE CONDUCTED UNTIL A NOTICE OF TERMINATION IS SUBMITTED.
4. CERTIFIED PERSONNEL (PROVIDED BY THE PRIMARY PERMITTEE) SHALL INSPECT AT LEAST ONCE PER MONTH DURING THE TERM OF THIS PERMIT (I.E., UNTIL A NOTICE OF TERMINATION IS SUBMITTED TO EPD) THE AREAS OF THE SITE THAT HAVE UNDERGONE FINAL STABILIZATION OR ESTABLISHED A CROP OF ANNUAL VEGETATION AND A SEEDING OF TARGET PERENNIALS APPROPRIATE FOR THE REGION. THESE AREAS SHALL BE INSPECTED FOR EVIDENCE OF, OR THE POTENTIAL FOR, POLLUTANTS ENTERING THE DRAINAGE SYSTEM AND THE RECEIVING WATER(S). EROSION AND SEDIMENT CONTROL MEASURES IDENTIFIED IN THE PLAN SHALL BE OBSERVED TO ENSURE THAT THEY ARE OPERATING CORRECTLY. WHERE DISCHARGE LOCATIONS OR POINTS ARE ACCESSIBLE, THEY SHALL BE INSPECTED TO ASCERTAIN WHETHER EROSION CONTROL MEASURES ARE EFFECTIVE IN PREVENTING SIGNIFICANT IMPACTS TO RECEIVING WATER(S).
5. BASED ON THE RESULTS OF EACH INSPECTION, THE SITE DESCRIPTION AND THE POLLUTION PREVENTION AND CONTROL MEASURES IDENTIFIED IN THE EROSION, SEDIMENTATION AND POLLUTION CONTROL PLAN, THE PLAN SHALL BE REVISED AS APPROPRIATE NOT LATER THAN SEVEN (7) CALENDAR DAYS FOLLOWING EACH INSPECTION. IMPLEMENTATION OF SUCH CHANGES SHALL BE MADE AS SOON AS PRACTICAL BUT IN NO CASE LATER THAN SEVEN (7) CALENDAR DAYS FOLLOWING EACH INSPECTION. (#31)
6. A REPORT OF EACH INSPECTION THAT INCLUDES THE NAME(S) OF CERTIFIED PERSONNEL MAKING EACH INSPECTION, THE DATE(S) OF EACH INSPECTION, CONSTRUCTION PHASE (I.E., INITIAL, INTERMEDIATE OR FINAL) , MAJOR OBSERVATIONS RELATING TO THE IMPLEMENTATION OF THE EROSION, SEDIMENTATION AND POLLUTION CONTROL PLAN, AND ACTIONS TAKEN IN ACCORDANCE WITH PART IV.D.4.A.(5). OF THE PERMIT SHALT BE MADE AND RETAINED AT THE SITE OR BE READILY AVAILABLE AT A DESIGNATED ALTERNATE LOCATION UNTIL THE ENTIRE SITE OR THAT PORTION OF A CONSTRUCTION PROJECT THAT HAS BEEN PHASED HAS UNDERGONE FINAL STABILIZATION AND A NOTICE OF TERMINATION IS SUBMITTED TO EPD. SUCH REPORTS SHALL BE READILY AVAILABLE BY END OF THE SECOND BUSINESS DAY AND/OR WORKING DAY AND SHALL IDENTIFY ALL INCIDENTS OF BEST MANAGEMENT PRACTICES THAT HAVE NOT BEEN PROPERLY INSTALLED AND/OR MAINTAINED AS DESCRIBED IN THE PLAN. WHERE THE REPORT DOES NOT IDENTIFY ANY INCIDENTS, THE INSPECTION REPORT SHALL CONTAIN A STATEMENT THAT THE BEST MANAGEMENT PRACTICES ARE IN COMPLIANCE WITH THE EROSION, SEDIMENTATION AND POLLUTION CONTROL PLAN. THE REPORT SHALL BE SIGNED IN ACCORDANCE WITH PART V.G.2. OF THIS PERMIT.
7. THE PRIMARY PERMITTEE MUST RETAIN THE DESIGN PROFESSIONAL WHO PREPARED THE PLAN TO CONDUCT INSPECTIONS DURING THE INTERMEDIATE GRADING AND DRAINAGE BMP PHASE AND DURING THE FINAL BMP PHASE.

STORM WATER SAMPLING REQUIREMENTS

SAMPLE ANALYSIS

(#33) STORM WATER SAMPLES ARE TO BE ANALYZED IN ACCORDANCE WITH METHODOLOGY AND TEST PROCEDURES ESTABLISHED BY 40 CFR PART 136 AND THE GUIDANCE DOCUMENT TITLED "NPDES STORM WATER SAMPLING GUIDANCE DOCUMENT, EPA 833-8-92-001".

STORM WATER IS TO BE SAMPLED FOR NEPHELOMETRIC TURBIDITY UNITS (NTU) AT THE OUTFALL LOCATION. A DISCHARGE OF STORM WATER RUNOFF FROM DISTURBED AREAS WHERE BEST MANAGEMENT PRACTICES HAVE NOT BEEN PROPERLY DESIGNED, INSTALLED, AND MAINTAINED SHALL CONSTITUTE A SEPARATE VIOLATION FOR EACH DAY ON WHICH SUCH A CONDITION RESULTS IN THE TURBIDITY OF THE DISCHARGE EXCEEDING 50, THE VALUE THAT WAS SELECTED FROM APPENDIX B IN PERMIT NO. GAR 100002. THE NTU IS BASED UPON THE DISTURBED ACREAGE OF 19.00 ACRES FOR THE PROJECT SITE, THE SURFACE WATER DRAINAGE AREA OF 0.0469 SQUARE MILES, AND RECEIVING WATER WHICH SUPPORTS WARM WATER FISHERIES.

SAMPLE TYPE

ALL SAMPLING SHALL BE COLLECTED BY "GRAB SAMPLES" AND THE ANALYSIS OF THESE SAMPLES MUST BE CONDUCTED IN ACCORDANCE WITH METHODOLOGY AND TEST PROCEDURES ESTABLISHED BY 40 CFR PART 136 (UNLESS OTHER TEST PROCEDURES HAVE BEEN APPROVED). THE GUIDANCE DOCUMENT TITLED "NPDES STORM WATER SAMPLING GUIDANCE DOCUMENT, EPA 833-B-92-001" AND GUIDANCE DOCUMENTS THAT MAY BE PREPARED BY THE EPD.

1. SAMPLE CONTAINERS SHOULD BE LABELED PRIOR TO COLLECTING THE SAMPLES.
2. SAMPLES SHOULD BE WELL MIXED BEFORE TRANSFERRING TO A SECONDARY CONTAINER
3. LARGE MOUTH, WELL CLEANED AND RINSED GLASS OR PLASTIC JARS SHOULD BE USED FOR COLLECTING SAMPLES. THE JARS SHOULD BE CLEANED THOROUGHLY TO AVOID CONTAMINATION.
4. MANUAL, AUTOMATIC OR RISING STAGE SAMPLING MAY BE UTILIZED. SAMPLES REQUIRED BY THIS PERMIT SHOULD BE ANALYZED IMMEDIATELY, BUT IN NO CASE LATER THAN 48 HOURS AFTER COLLECTION. HOWEVER, SAMPLES FROM AUTOMATIC SAMPLERS MUST BE COLLECTED NO LATER THAN THE NEXT BUSINESS DAY AFTER THEIR ACCUMULATION, UNLESS FLOW THROUGH AUTOMATED ANALYSIS IS UTILIZED. IF AUTOMATIC SAMPLING IS UTILIZED AND THE AUTOMATIC SAMPLER IS NOT ACTIVATED DURING THE QUALIFYING EVENT, THE PERMITTEE MUST UTILIZE MANUAL SAMPLING OR RISING STAGE SAMPLING DURING THE NEXT QUALIFYING EVENT. DILUTION OF SAMPLES IS NOT REQUIRED. SAMPLES MAY BE ANALYZED DIRECTLY WITH A PROPERLY CALIBRATED TURBIDIMETER. SAMPLES ARE NOT REQUIRED TO BE COOLED
5. SAMPLING AND ANALYSIS OF THE RECEIVING WATER(S) OR OUTFALLS BEYOND THE MINIMUM FREQUENCY STATED IN THIS PERMIT MUST BE REPORTED TO EPD AS SPECIFIED IN PART IV.E.

SAMPLING POINTS

FOR CONSTRUCTION ACTIVITIES THE PRIMARY PERMITTEE MUST SAMPLE ALL RECEIVING WATER(S), OR ALL OUTFALL(S), OR A COMBINATION OF RECEIVING WATER(S) AND OUTFALL(S). SAMPLES TAKEN FOR THE PURPOSE OF COMPLIANCE WITH THIS PERMIT SHALL BE REPRESENTATIVE OF THE MONITORED ACTIVITY AND REPRESENTATIVE OF THE WATER QUALITY OF THE RECEIVING WATER(S) AND/OR THE STORM WATER OUTFALL(S) USING THE FOLLOWING MINIMUM GUIDELINES:

A. THE UPSTREAM SAMPLE FOR EACH RECEIVING WATER(S) MUST BE TAKEN IMMEDIATELY UPSTREAM OF THE CONFLUENCE OF THE FIRST STORM WATER DISCHARGE FROM THE PERMITTED ACTIVITY (I.E., THE DISCHARGE FARTHEST UPSTREAM AT THE SITE), BUT DOWNSTREAM OF ANY OTHER STORM WATER DISCHARGES NOT ASSOCIATED WITH THE PERMITTED ACTIVITY. WHERE APPROPRIATE, SEVERAL UPSTREAM SAMPLES FROM ACROSS THE RECEIVING WATER(S) MAY NEED TO BE TAKEN AND THE ARITHMETIC AVERAGE OF THE TURBIDITY OF THESE SAMPLES USED FOR THE UPSTREAM TURBIDITY VALUE.

B. THE DOWNSTREAM SAMPLE FOR EACH RECEIVING WATER(S) MUST BE TAKEN DOWNSTREAM OF THE CONFLUENCE OF THE LAST STORM WATER DISCHARGE FROM THE PERMITTED ACTIVITY ((I.E., THE DISCHARGE FARTHEST DOWNSTREAM AT THE SITE) BUT UPSTREAM OF ANY OTHER STORM WATER DISCHARGE NOT ASSOCIATED WITH THE PERMITTED ACTIVITY. WHERE APPROPRIATE, SEVERAL DOWNSTREAM SAMPLES FROM ACROSS THE RECEIVING WATER(S) MAY NEED TO BE TAKEN AND THE ARITHMETIC AVERAGE OF THE TURBIDITY OF THESE SAMPLES USED FOR THE DOWNSTREAM TURBIDITY VALUE.

C. IDEALLY THE SAMPLES SHOULD BE TAKEN FROM THE HORIZONTAL AND VERTICAL CENTER OF THE RECEIVING WATER(S) OR THE STORM WATER OUTFALL CHANNEL(S).

D. CARE SHOULD BE TAKEN TO AVOID STIRRING THE BOTTOM SEDIMENTS IN THE RECEIVING WATER(S) OR IN THE OUTFALL STORM WATER CHANNEL.

E. THE SAMPLING CONTAINER SHOULD BE HELD SO THAT THE OPENING FACES UPSTREAM.

F. THE SAMPLES SHOULD BE KEPT FREE FROM FLOATING DEBRIS.

G. PERMITTEES DO NOT HAVE TO SAMPLE SHEET FLOW THAT FLOWS ONTO UNDISTURBED NATURAL AREAS OR AREAS STABILIZED BY THE PROJECT. FOR PURPOSES OF THIS SECTION, STABILIZED SHALL MEAN, FOR UNPAVED AREAS AND AREAS NOT COVERED BY PERMANENT STRUCTURES,, 100% OF THE SOIL SURFACE IS UNIFORMLY COVERED IN PERMANENT VEGETATION WITH A DENSITY OF 70% OR GREATER, OR LANDSCAPED ACCORDING TO THE PLAN (UNIFORMLY COVERED WITH LANDSCAPING MATERIALS IN PLANNED LANDSCAPED AREAS), OR EQUIVALENT PERMANENT STABILIZATION MEASURES AS DEFINED IN THE MANUAL (EXCLUDING A CROP OF ANNUAL VEGETATION AND A SEEDING OF TARGET CROP PERENNIALS APPROPRIATE FOR THE REGION). FOR INFRASTRUCTURE CONSTRUCTION PROJECTS ON LAND USED FOR AGRICULTURAL OR SILVICULTURAL PURPOSES, FINAL STABILIZATION MAY BE ACCOMPLISHED BY STABILIZING THE DISTURBED LAND FOR ITS AGRICULTURAL OR SILVICULTURAL USE.

H. ALL SAMPLING PURSUANT TO THIS PERMIT MUST BE DONE IN SUCH A WAY (INCLUDING GENERALLY ACCEPTED SAMPLING METHODS, LOCATIONS, TIMING, AND FREQUENCY) AS TO ACCURATELY REFLECT WHETHER STORM WATER RUNOFF FROM THE FACILITY/ SITE IS IN COMPLIANCE WITH THE STANDARDS SET FORTH IN PARTS III.C.3 OR III.C.4, WHICHEVER IS APPLICABLE.

SAMPLING FREQUENCY

(#31) THE PRIMARY PERMITTEE MUST SAMPLE IN ACCORDANCE WITH THE PLAN AT LEAST ONCE FOR EACH RAINFALL EVENT DESCRIBED BELOW. FOR A QUALIFYING EVENT, THE PERMITTEE SHALL SAMPLE AT THE BEGINNING OF ANY STORM WATER DISCHARGE TO A MONITORED RECEIVING WATER AND/OR FROM A MONITORED OUTFALL LOCATION WITHIN FORTY-FIVE (45) MINUTES OR AS SOON AS POSSIBLE (WHERE MANUAL AND AUTOMATIC SAMPLING ARE IMPOSSIBLE (AS DEFINED IN THIS PERMIT), OR ARE BEYOND THE PERMITTEE'S CONTROL, THE PERMITTEE SHALL TAKE SAMPLES AS SOON AS POSSIBLE, BUT IN NO CASE MORE THAN TWELVE (12) HOURS AFTER THE BEGINNING OF THE STORM WATER DISCHARGE. SAMPLING BY THE PRIMARY PERMITTEE SHALL OCCUR FOR THE FOLLOWING:

A. FOR EACH AREA OF THE SITE THAT DISCHARGES TO A RECEIVING WATER OR FROM AN OUTFALL, THE FIRST RAIN EVENT THAT REACHES OR EXCEEDS 0.5 INCH WITH A STORM WATER DISCHARGE THAT OCCURS DURING NORMAL BUSINESS HOURS AS DEFINED IN THIS PERMIT. AFTER ALL CLEARING AND GRUBBING OPERATIONS HAVE BEEN COMPLETED, BUT PRIOR TO COMPLETION OF MASS GRADING OPERATIONS, IN THE DRAINAGE AREA OF THE LOCATION SELECTED AS THE REPRESENTATIVE SAMPLING LOCATION;
B. IN ADDITION TO (A) ABOVE, FOR EACH AREA OF THE SITE THAT DISCHARGES TO A RECEIVING WATER OR FROM AN OUTFALL, THE FIRST RAIN EVENT THAT REACHES OR EXCEEDS 0.5 INCH WITH A STORM WATER DISCHARGE THAT OCCURS DURING NORMAL BUSINESS HOURS AS DEFINED IN THIS PERMIT EITHER 90 DAYS AFTER THE FIRST SAMPLING EVENT OR AFTER ALL MASS GRADING OPERATIONS HAVE BEEN COMPLETED, BUT PRIOR TO SUBMITTAL OF A NOT, IN THE DRAINAGE AREA OF THE LOCATION SELECTED AS THE REPRESENTATIVE SAMPLING LOCATION, WHICHEVER COMES FIRST.
C. **WITH CONFORMANCE WITH NPDES APPENDIX 1 SELECTION CRITERIA FOR PROJECTS WITHIN 1 MILE OF THE LIMITS OF AN IMPAIRED STREAM, THE CONTRACTOR SHALL CONDUCT TURBIDITY SAMPLING AFTER EVERY RAIN EVENT OF 0.5 INCH OR GREATER WITHIN ANY 24 HOUR PERIOD, RECOGNIZING THE EXCEPTION SPECIFIED IN PART IV.D.6.d OF THE NPDES PERMITS.**
D. AT THE TIME OF SAMPLING PERFORMED PURSUANT TO (A) AND (B) ABOVE, IF BMPS IN ANY AREA OF THE SITE THAT DISCHARGES TO A RECEIVING WATER OR FROM AN OUTFALL ARE NOT PROPERLY DESIGNED, INSTALLED AND MAINTAINED, CORRECTIVE ACTION SHALL BE DEFINED AND IMPLEMENTED WITHIN TWO (2) BUSINESS DAYS, AND TURBIDITY SAMPLES SHALL BE TAKEN FROM DISCHARGES FROM THAT AREA OF THE SITE FOR EACH SUBSEQUENT RAIN EVENT THAT REACHES OR EXCEEDS 0.5 INCH DURING NORMAL BUSINESS HOURS* UNTIL THE SELECTED TURBIDITY STANDARD IS ATTAINED, OR UNTIL POST-STORM EVENT INSPECTIONS DETERMINE THAT BMPS ARE PROPERLY DESIGNED, INSTALLED AND MAINTAINED
E. WHERE SAMPLING PURSUANT TO (A), (B) OR (C) ABOVE IS REQUIRED BUT NOT POSSIBLE (OR NOT REQUIRED BECAUSE THERE WAS NO DISCHARGE), THE PERMITTEE, IN ACCORDANCE WITH PARTIV.D.4.A.(6), MUST INCLUDE A WRITTEN JUSTIFICATION IN THE INSPECTION REPORT OF WHY SAMPLING WAS NOT PERFORMED. PROVIDING THIS JUSTIFICATION DOES NOT RELIEVE THE PERMITTEE OF ANY SUBSEQUENT SAMPLING OBLIGATIONS UNDER (A), (B) OR (C) ABOVE; AND
F. EXISTING CONSTRUCTION ACTIVITIES, I.E., THOSE THAT ARE OCCURRING ON OR BEFORE THE EFFECTIVE DATE OF THIS PERMIT, THAT HAVE MET THE SAMPLING REQUIRED BY (A) ABOVE SHALL SAMPLE IN ACCORDANCE WITH (B). THOSE EXISTING CONSTRUCTION ACTIVITIES THAT HAVE MET THE SAMPLING REQUIRED BY (B) ABOVE SHALL NOT BE REQUIRED TO CONDUCT ADDITIONAL SAMPLING OTHER THAN AS REQUIRED BY (C) ABOVE.

NOTE THAT THE PERMITTEE MAY CHOOSE TO MEET THE REQUIREMENTS OF (A) AND (B) ABOVE BY COLLECTING TURBIDITY SAMPLES FROM ANY RAIN EVENT THAT REACHES OR EXCEEDS 0.5 INCH AND ALLOWS FOR SAMPLING AT ANY TIME OF THE DAY OR WEEK

2. HOWEVER, WHERE MANUAL AND AUTOMATIC SAMPLING ARE IMPOSSIBLE (AS DEFINED IN THIS PERMIT), OR ARE BEYOND THE PERMITTEE'S CONTROL, THE PERMITTEE'S SHALL TAKE SAMPLES AS SOON AS POSSIBLE, BUT IN NO CASE MORE THAN TWELVE (12) HOURS AFTER THE BEGINNING OF THE STORM WATER DISCHARGE.

3. SAMPLING BY THE PERMITTEE'S SHALL OCCUR FOR THE FOLLOWING EVENTS:

A. FOR EACH AREA OF THE SITE THAT DISCHARGES TO A RECEIVING STREAM, THE FIRST RAIN EVENT THAT REACHES OR EXCEEDS 0.5 INCH AND ALLOWS FOR MONITORING DURING NORMAL BUSINESS HOURS* (MONDAY THRU FRIDAY, 8:00 AM TO 5:00PM AND SATURDAY 8:00 AM TO 5:00 PM WHEN CONSTRUCTION ACTIVITY IS BEING CONDUCTED BY THE PRIMARY PERMITTEE'S) THAT OCCURS AFTER ALL CLEARING AND GRUBBING OPERATIONS HAVE BEEN COMPLETED IN THE DRAINAGE AREA OF THE LOCATION SELECTED AS THE SAMPLING LOCATION;

B. IN ADDITION TO (A) ABOVE, FOR EACH AREA OF THE SITE THAT DISCHARGES TO A RECEIVING STREAM, THE FIRST RAIN EVENT THAT REACHES OR EXCEEDS 0.5 INCH AND ALLOWS FOR MONITORING DURING NORMAL BUSINESS HOURS* THAT OCCURS EITHER 90 DAYS AFTER THE FIRST SAMPLING EVENT OR AFTER ALL MASS GRADING OPERATIONS HAVE BEEN COMPLETED IN THE DRAINAGE AREA OF THE LOCATION SELECTED AS THE SAMPLING LOCATION, WHICHEVER COMES FIRST;

C. AT THE TIME OF SAMPLING PERFORMED PURSUANT TO (A) AND (B) ABOVE, IF BMPS ARE FOUND TO BE PROPERLY DESIGNED, INSTALLED AND MAINTAINED, NO FURTHER ACTION IS REQUIRED. IF BMPS IN ANY AREA OF THE SITE THAT DISCHARGES TO A RECEIVING STREAM ARE NOT PROPERLY DESIGNED, INSTALLED AND MAINTAINED, CORRECTIVE ACTION SHALL BE DEFINED AND IMPLEMENTED WITHIN 2 BUSINESS DAYS, AND TURBIDITY SAMPLES SHALL BE TAKEN FROM DISCHARGES FROM THAT AREA OF THE SITE FOR EACH SUBSEQUENT RAIN EVEN THAT REACHES OR EXCEEDS 0.5 INCH DURING NORMAL BUSINESS HOURS* UNTIL THE SELECTED TURBIDITY STANDARD IS ATTAINED, OR UNTIL POST-STORM EVENT INSPECTIONS DETERMINE THAT BMPS ARE PROPERLY DESIGNED, INSTALLED AND MAINTAINED; AND

D. EXISTING CONSTRUCTION ACTIVITIES, I.E., THOSE THAT ARE OCCURRING ON OR BEFORE THE EFFECTIVE DATE OF THIS PERMIT, THAT HAVE MET THE SAMPLING REQUIRED BY (A) ABOVE SHALL SAMPLE IN ACCORDANCE WITH (B). THOSE EXISTING CONSTRUCTION ACTIVITIES THAT HAVE MET THE SAMPLING REQUIRED BY (B) ABOVE SHALL NOT BE REQUIRED TO CONDUCT ADDITIONAL SAMPLING OTHER THAN AS REQUIRED BY (C) ABOVE.

*NOTE THAT THE PERMITTEE MAY CHOOSE TO MEET THE REQUIREMENTS OF (A) AND (C) ABOVE BY COLLECTING TURBIDITY SAMPLES FROM ANY RAIN EVENT THAT REACHES OR EXCEEDS 0.5 INCH AND ALLOWS FOR MONITORING AT ANY TIME OF THE DAY OR WEEK.

NON-STORM WATER DISCHARGES

EXCEPT FOR FLOWS FROM FIRE FIGHTING ACTIVITIES, SOURCES OF NON-STORM WATER LISTED IN PART 111.A.2. OF THIS PERMIT THAT ARE COMBINED WITH STORM WATER DISCHARGES ASSOCIATED WITH CONSTRUCTION ACTIVITY MUST BE IDENTIFIED IN THE PLAN. THE PLAN SHALL IDENTIFY AND ENSURE THE IMPLEMENTATION OF APPROPRIATE POLLUTION PREVENTION MEASURES FOR THE NON-STORM WATER COMPONENT(S) OF THE DISCHARGE

REPORTING

(#30)

1. THE APPLICABLE PERMITTEES ARE REQUIRED TO SUBMIT A SUMMARY OF THE MONITORING RESULTS TO THE EPD AT THE ADDRESS SHOWN IN PART II.C. BY THE FIFTEENTH DAY OF THE MONTH FOLLOWING THE REPORTING PERIOD. REPORTING PERIODS ARE MONTHS DURING WHICH SAMPLES ARE TAKEN IN ACCORDANCE WITH THIS PERMIT. SAMPLING RESULTS SHALL BE IN A CLEARLY LEGIBLE FORMAT. UPON WRITTEN NOTIFICATION, EPD MAY REQUIRE THE APPLICABLE PERMITTEE TO SUBMIT THE SAMPLING RESULTS ON A MORE FREQUENT BASIS. SAMPLING AND ANALYSIS OF ANY STORM WATER DISCHARGE(S) OR THE RECEIVING WATER(S) BEYOND THE MINIMUM FREQUENCY STATED IN THIS PERMIT MUST BE REPORTED IN A SIMILAR MANNER TO THE EPD. THE SAMPLING REPORTS MUST BE SIGNED IN ACCORDANCE WITH PART V.G. SAMPLING REPORTS MUST BE SUBMITTED TO THE EPD UNTIL SUCH A TIME AS A NOT IS SUBMITTED IN ACCORDANCE WITH PART VI.
2. EACH PERMITTEE MUST RETAIN COPIES OF ALL MONITORING RESULTS REPORTED BY THAT PERMITTEE IN ACCORDANCE WITH THIS PART. IN ADDITION TO OTHER RECORD KEEPING REQUIREMENTS, THE MONITORING INFORMATION SHALL INCLUDE:
   A. THE RAINFALL AMOUNT, DATE, EXACT PLACE AND TIME OF SAMPLING OR MEASUREMENTS
   B. THE NAME(S) OF THE CERTIFIED PERSONNEL WHO PERFORMED THE SAMPLING AND MEASUREMENTS;
   C. THE DATE(S) ANALYSES WERE PERFORMED;
   D. THE TIME(S) ANALYSES WERE INITIATED;
   E. THE NAME(S) OF THE CERTIFIED PERSONNEL WHO PERFORMED THE ANALYSES;
   F. REFERENCES AND WRITTEN PROCEDURES, WHEN AVAILABLE, FOR THE ANALYTICAL TECHNIQUES OR METHODS USED;
   G. THE RESULTS OF SUCH ANALYSES, INCLUDING THE BENCH SHEETS, INSTRUMENT READOUTS, COMPUTER DISKS OR TAPES, ETC., USED TO DETERMINE THESE RESULTS;
   H. RESULTS WHICH EXCEED 1000 NTU SHALL BE REPORTED AS "EXCEEDS 1000 NTU;" AND
   I. CERTIFICATION STATEMENT THAT SAMPLING WAS CONDUCTED AS PER THE PLAN
3. ALL WRITTEN CORRESPONDENCE REQUIRED BY THIS PERMIT SHALL BE SUBMITTED BY RETURN RECEIPT CERTIFIED MAIL (OR SIMILAR SERVICE) TO THE APPROPRIATE DISTRICT OFFICE OF THE EPD ACCORDING TO THE SCHEDULE IN APPENDIX A OF THIS PERMIT. THE PERMITTEE SHALL RETAIN A COPY OF THE PROOF OF SUBMITTAL AT THE CONSTRUCTION SITE OR THE PROOF OF SUBMITTAL SHALL BE READILY AVAILABLE AT A DESIGNATED LOCATION FROM COMMENCEMENT OF CONSTRUCTION UNTIL SUCH TIME AS A NOT IS SUBMITTED IN ACCORDANCE WITH PART VI. IF AN ELECTRONIC SUBMITTAL IS PROVIDED BY EPD THEN THE WRITTEN CORRESPONDENCE MAY BE SUBMITTED ELECTRONICALLY; IF REQUIRED, A PAPER COPY MUST ALSO BE SUBMITTED BY RETURN RECEIPT CERTIFIED MAIL OR SIMILAR SERVICE.

RETENTION OF RECORDS

(#32)

1. THE PRIMARY PERMITTEE SHALL RETAIN THE FOLLOWING RECORDS AT THE CONSTRUCTION SITE OR THE RECORDS SHALL BE READILY AVAILABLE AT A DESIGNATED ALTERNATE LOCATION FROM COMMENCEMENT OF CONSTRUCTION UNTIL SUCH TIME AS A NOT IS SUBMITTED IN ACCORDANCE WITH PART VI:
   A. A COPY OF ALL NOTICES OF INTENT SUBMITTED TO EPD;
   B. A COPY OF THE EROSION, SEDIMENTATION AND POLLUTION CONTROL PLAN REQUIRED BY THIS PERMIT;
   C. THE DESIGN PROFESSIONAL'S REPORT OF THE RESULTS OF THE INSPECTION CONDUCTED IN ACCORDANCE WITH PART IV.A.5. OF THIS PERMIT;
   D. A COPY OF ALL MONITORING INFORMATION, RESULTS, AND REPORTS REQUIRED BY THIS PERMIT;
   E. A COPY OF ALL INSPECTION REPORTS GENERATED IN ACCORDANCE WITH PART IV.D.4.A. OF THIS PERMIT;
   F. A COPY OF ALL VIOLATION SUMMARIES AND VIOLATION SUMMARY REPORTS GENERATED IN ACCORDANCE WITH PART III.D.2. OF THIS PERMIT; AND
   G. DAILY RAINFALL INFORMATION COLLECTED IN ACCORDANCE WITH PART IV.D.4.A.(1)(C) OF THIS PERMIT.
2. COPIES OF ALL NOTICES OF INTENT, NOTICES OF TERMINATION, INSPECTION REPORTS, SAMPLING REPORTS (INCLUDING ALL CALIBRATION AND MAINTENANCE RECORDS AND ALL ORIGINAL STRIP CHART RECORDINGS FOR CONTINUOUS MONITORING INSTRUMENTATION), OR OTHER REPORTS REQUESTED BY THE EPD, EROSION, SEDIMENTATION AND POLLUTION CONTROL PLANS, RECORDS OF ALL DATA USED TO COMPLETE THE NOTICE OF INTENT TO BE COVERED BY THIS PERMIT AND ALL OTHER RECORDS REQUIRED BY THIS PERMIT SHALL BE RETAINED BY THE PERMITTEE WHO EITHER PRODUCED OR USED IT FOR A PERIOD OF AT LEAST THREE YEARS FROM THE DATE THAT THE NOT IS SUBMITTED IN ACCORDANCE WITH PART VI OF THIS PERMIT. THESE RECORDS MUST BE MAINTAINED AT THE PERMITTEE'S PRIMARY PLACE OF BUSINESS OR AT A DESIGNATED ALTERNATIVE LOCATION ONCE THE CONSTRUCTION ACTIVITY HAS CEASED AT THE PERMITTED SITE. THIS PERIOD MAY BE EXTENDED BY REQUEST OF THE EPD AT ANY TIME UPON WRITTEN NOTIFICATION TO THE PERMITTEE

REPORT SUBMITTAL

ALL WRITTEN CORRESPONDENCE REQUIRED BY THIS PERMIT SHALL BE SUBMITTED BY RETURN RECEIPT CERTIFIED MAIL (OR SIMILAR SERVICE) TO THE APPROPRIATE DISTRICT OFFICE OF THE EPD ACCORDING TO THE SCHEDULE IN APPENDIX A OF THIS PERMIT.

COMPLIANCE WITH FEDERAL, STATE AND LOCAL REGULATIONS

THE CONTRACTOR WILL OBTAIN COPIES OF ANY AND ALL LOCAL AND STATE REGULATIONS THAT ARE APPLICABLE TO STORM WATER MANAGEMENT, EROSION CONTROL, AND POLLUTION MINIMIZATION AT THIS JOB SITE AND WILL COMPLY FULLY WITH SUCH REGULATIONS. THE CONTRACTOR WILL SUBMIT WRITTEN EVIDENCE OF SUCH COMPLIANCE IT REQUESTED BY THE OWNER OR ANY AGENT OF A REGULATORY BODY. THE CONTRACTOR WILL COMPLY WITH ALL CONDITIONS OF ANY AND ALL LOCAL, STATE AND FEDERAL AGENCIES HAVE GOVERNING AUTHORITY, INCLUDING THE CONDITIONS RELATED TO MAINTAINING THE ESPCP AND EVIDENCE OF COMPLIANCE WITH THE ESPCP AT THE JOB SITE AND ALLOWING REGULATORY PERSONNEL ACCESS TO THE JOB SITE TO RECORDS IN ORDER TO DETERMINE COMPLIANCE.

SOIL CLEANUP AND CONTROL PRACTICES (INCLUDING PETROLEUM SPILLS AND LEAKS)

1. LOCAL, STATE AND MANUFACTURER'S RECOMMENDED METHODS FOR SPILL CLEANUP WILL BE CLEARLY POSTED AN PROCEDURES WILL BE MADE AVAILABLE TO SITE PERSONNEL.
2. MATERIAL AND EQUIPMENT NECESSARY FOR SPILL CLEANUP WILL BE KEPT IN THE MATERIAL STORAGE AREAS. TYPICAL MATERIALS AND EQUIPMENT INCLUDES, BUT IS NOT LIMITED TO, BROOMS, DUSTPANS, MAPS, RAGS, GLOVES, GOGGLES, CAT LITTER, SAND, SAWDUST AND PROPERLY LABELED PLASTIC AND METAL WASTE CONTAINERS.
3. SPILL PREVENTION PRACTICES AND PROCEDURES WILL BE REVIEWED AFTER A SPILL AND ADJUSTED AS NECESSARY TO PREVENT FUTURE SPILLS.
4. ALL SPILLS WILL BE CLEANED UP IMMEDIATELY UPON DISCOVERY. ALL SPILLS WILL BE REPORTED AS REQUIRED BY LOCAL, STATE AND FEDERAL REGULATIONS.
5. FOR SPILLS THAT IMPACT SURFACE WATER (LEAVE A SHEEN ON SURFACE WATER), THE NATIONAL RESPONSE CENTER (NRC) WILL BE CONTACTED WITHIN 24 HOUR AT 1-800-426-2675.
6. FOR SPILLS OF AN UNKNOWN AMOUNT, THE NATIONAL CENTER (NRC) WILL BE CONTACTED WITH 24 HOURS AT 1-800-426-2675.
7. FOR SPILLS GREATER THAN 25 GALLONS AND NO SURFACE WATER IMPACTS, THE GEORGIA EPD WILL BE CONTACTED WITHIN 24 HOURS.
8. FOR SPILLS LESS THAN 25 GALLONS AND NO SURFACE WATER IMPACTS, THE SPILL WILL BE CLEANED UP AND LOCAL AGENCIES WILL BE CONTACTED AS REQUIRED.

THE CONTRACTOR SHALL NOTIFY THE LICENSED PROFESSIONAL WHO PREPARED THIS PLAN IF MORE THAN 1320 GALLONS OF PETROLEUM IS STORED ONSITE (THIS INCLUDES CAPACITIES OF EQUIPMENT) OR IF ANY ONE PIECE OF EQUIPMENT HAS A CAPACITY GREATER THAN 660 GALLONS. THE CONTRACTOR WILL NEED A SPILL PREVENTION CONTAINMENT AND COUNTERMEASURES PLAN PREPARED BY THAT LICENSED PROFESSIONAL.

WASTE DISPOSAL

1. LOCATE WASTE COLLECTION AREAS AWAY FROM STREETS, GUTTERS, WATERCOURSES AND STORM DRAINS. WASTE COLLECTION AREAS, SUCH AS DUMPSTERS, ARE OFTEN BEST LOCATED NEAR CONSTRUCTION SITE ENTRANCES TO MINIMIZE TRAFFIC ON DISTURBED SOILS. THE PLAN INCLUDES SECONDARY CONTAINMENT AROUND LIQUID WASTE COLLECTION AREAS TO FURTHER MINIMIZE THE LIKELIHOOD OF CONTAMINATED DISCHARGES. .
2. (#18) **WASTE MATERIALS SHALL NOT BE DISCHARGED TO WATERS OF THE STTE, EXCEPT AS AUTHORIZED BY A SECTION 404 PERMIT.**

HAZARDOUS WASTES:

1. ALL HAZARDOUS WASTE MATERIALS WILL BE DISPOSED OF IN A MANNER SPECIFIED BY LOCAL, STATE &/OR FEDERAL REGULATIONS AND BY THE MANUFACTURER OF SUCH PRODUCTS. THE JOB SITE SUPERINTENDENT, WHO WILL ALSO BE RESPONSIBLE FOR SEEING THAT THESE PRACTICES ARE FOLLOWED, WILL INSTRUCT SITE PERSONNEL IN THESE PRACTICES. MATERIAL SAFETY DATA SHEETS (MSDS'S) FOR EACH SUBSTANCE WITH HAZARDOUS PROPERTIES THAT IS USED ON THE JOB SITE WILL BE OBTAINED AND USED FOR THE PROPER MANAGEMENT OF POTENTIAL WASTES THAT MAY RESULT FROM THESE PRODUCTS. AN MSDS WILL BE POSTED IN THE IMMEDIATE AREA WHERE SUCH PRODUCT IS STORED &/OR USED AND ANOTHER COPY OF EACH MSDS WILL BE MAINTAINED IN THE ESPCP FILE AT THE JOB SITE CONSTRUCTION TRAILER OFFICE. EACH EMPLOYEE WHO MUST HANDLE A SUBSTANCE WITH HAZARDOUS PROPERTIES WILL BE INSTRUCTED ON THE USE OF MSDS SHEETS AND THE SPECIFIC INFORMATION IN THE APPLICABLE MSDS FOR THE PRODUCT HE/SHE IS USING, PARTICULARLY REGARDING SPILL CONTROL TECHNIQUES.
2. THE CONTRACTOR WILL IMPLEMENT THE SPILL PREVENTION CONTROL AND COUNTERMEASURES (SPCC) PLAN FOUND WITHIN THIS ESPCP AND WILL TRAIN ALL PERSONNEL IN THE PROPER CLEANUP AND HANDLING OF SPILLED MATERIALS. NO SPILLED HAZARDOUS MATERIALS OR HAZARDOUS WASTES WILL BE ALLOWED TO COME IN CONTACT WITH STORMWATER DISCHARGES. IF SUCH CONTACT OCCURS, THE STORMWATER DISCHARGE WILL BE CONTAINED ON SITE UNTIL APPROPRIATE MEASURES IN COMPLIANCE WITH STATE AND FEDERAL REGULATIONS ARE TAKEN TO DISPOSE OF SUCH CONTAMINATED STORMWATER. IT SHALL BE THE RESPONSIBILITY OF THE JOB SITE SUPERINTENDENT TO PROPERLY TRAIN ALL PERSONNEL IN THE USE OF THE SPCC PLAN.

SANITARY WASTES:

1. A MINIMUM OF ONE PORTABLE SANITARY UNIT WILL BE PROVIDED FOR EVERY TEN (10) WORKERS ON THE SITE. ALL SANITARY WASTE WILL BE COLLECTED FROM THE PORTABLE UNITS A MINIMUM OF ONE TIME PER WEEK BY A LICENSED PORTABLE FACILITY PROVIDER IN COMPLETE COMPLIANCE WITH THE LOCAL AND STATE REGULATIONS.
2. ALL SANITARY WASTE UNITS WILL BE LOCATED IN AN AREA WHERE THE LIKELIHOOD OF THE UNIT CONTRIBUTING TO STORM WATER DISCHARGE IS NEGLIGIBLE. ADDITIONAL CONTAINMENT BMP'S MUST BE IMPLEMENTED, SUCH AS GRAVEL BAGS OR SPECIALLY DESIGNED PLASTIC SKID CONTAINERS AROUND THE BASE, TO PREVENT WASTES FROM CONTRIBUTING TO STORM WATER DISCHARGES. THE LOCATION OF SANITARY WASTE UNITS MUST BE IDENTIFIED ON THE EROSION CONTROL PLAN PHASE TWO SHEET AS LISTED ON THE TABLE OF CONTENTS, BY THE CONTRACTOR ONCE THE LOCATIONS HAVE BEEN DETERMINED.
3. SANITARY SEWER WILL BE PROVIDED BY MUNICIPAL AUTHORITY/SEPTIC SYSTEM AT THE COMPLETION OF THE PROJECT.

KATIE STRICKLAND, P.E.
GASWCC LEVEL II
CERTIFICATION #087240
EXPIRES 03/15/2025

PRIME
A Stratus Team Company
3715 NORTHSIDE PARKWAY NW
BUILDING 300, SUITE 200
ATLANTA, GEORGIA 30327
4 0 4 - 4 2 5 - 7 1 0 0

PROJECT:
DALTON PICKLEBALL COMPLEX
904 CIVIC DR,
DALTON, GA 30721
PREPARED FOR:
CITY OF DALTON, GA

REVISIONS		
NO.	DATE	DESCRIPTION

SEAL
GEORGIA REGISTERED PROFESSIONAL ENGINEER No. PE044235 KATHRYN D. STRICKLAND
DATE: 08/09/2024

© 2024 PRIME ENGINEERING, INC.
Scales, as stated hereon, are valid on the original drawing; the dimensions of which are 24 by 36 inches. These scales, noted hereon, are hereby changed by the ratio of the overall sheet dimensions of the print to corresponding dimensions of the original drawing. This drawing is the property of PRIME ENGINEERING, INCORPORATED and is not to be reproduced or copied in whole or in part. It is only to be used for the project and site specifically identified herein and is not to be used on any other project. It is to be returned upon request.

DRAWING TITLE
ES&PC PREMITTING NOTES

DRAWING DATE	DRAWN BY
08/09/2024	SY
DRAWING SCALE	DESIGNED BY
NOT TO SCALE	KDS
PROJECT NUMBER	CHECKED BY
2024-0283	KLK

DRAWING NUMBER
EC-003

NOT ISSUED FOR CONSTRUCTION

R:\A-Z\City of Dalton, GA\2024-0283 Dalton-Pickleball Complex\3 ENGINEERING\Drawings\EC-001 - ESPC NOTES - 2024-0283.dwg Thu, 08/08/24 10:56 AM

EROSION, SEDIMENTATION & POLLUTION CONTROL PLAN CHECKLIST
STAND ALONE CONSTRUCTION PROJECTS

SWCD:______ LIMESTONE VALLEY

Project Name:____ DALTON PICKLEBALL COMPLEX **Address:**_ 904 CIVIC DR, DALTON, GA 30721

Local Issuing Authority:_____ CITY OF DALTON **Date on Plans:**_____ 7/11/2024

Name & Email of person filling out checklist:_____ **KATIE STRICKLAND (kstrickland@prime-eng.com)**

TO BE SHOWN ON ES&PC PLAN

Plan Page #	Included Y/N	No.	Item
EC-004	Y	1	The applicable Erosion, Sedimentation and Pollution Control Plan Checklist established by the Commission as of January 1 of the year in which the land-disturbing activity was permitted. (The completed Checklist must be submitted with the ES&PC Plan or the Plan will not be reviewed)
EC-002	Y	2	Level II certification number issued by the Commission, signature and seal of the certified design professional. (Signature, seal and Level II number must be on each sheet pertaining to ES&PC plan or the Plan will not be reviewed)
EC-001	Y	3	Limits of disturbance shall be no greater than 50 acres at any one time without prior written authorization from the GAEPD District Office. If GAEPD approves the request to disturb 50 acres or more at any one time, the Plan must include at least 4 of the BMPs listed in Appendix 1 of this checklist and the GAEPD approval letter. * (A copy of the written approval by GAEPD must be attached to the plan for the Plan to be reviewed.)
EC-001	Y	4	The name and phone number of the 24-hour contact responsible for erosion, sedimentation and pollution controls.
EC-001	Y	5	Provide the name, address, email address, and phone number of primary permittee.
EC-001	Y	6	Note total and disturbed acreages of the project or phase under construction.
EC-001	Y	7	Provide the GPS location of the construction exit for the site. Give the Latitude and Longitude in decimal degrees.
EC-001	Y	8	Initial date of the Plan and the dates of any revisions made to the Plan including the entity who requested the revisions.
EC-002	Y	9	Description of the nature of construction activity and existing site conditions.
EC-001	Y	10	Provide vicinity map showing site's relation to surrounding areas. Include designation of specific phase, if necessary.
EC-001	Y	11	Identify the project receiving waters and describe all sensitive adjacent areas including streams, lakes, residential areas, wetlands, marshlands, etc. which may be affected.
EC-001	Y	12	Design professional's certification statement and signature that the site was visited prior to development of the ES&PC Plan as stated on **Part IV page 19** of the permit.
EC-001	Y	13	Design professional's certification statement and signature that the permittee's ES&PC Plan provides for an appropriate and comprehensive system of BMPs and sampling to meet permit requirements as stated on **Part IV page 19** of the permit. *
EC-001	Y	14	Clearly note the statement that "The design professional who prepared the ES&PC Plan is to inspect the installation of the initial sediment storage requirements and perimeter control BMPs within 7 days after installation." in accordance with **Part IV.A.5 page 25** of the permit. *
EC-001	Y	15	Clearly note the statement that "Non-exempt activities shall not be conducted within the 25 or 50-foot undisturbed stream buffers as measured from the point of wrested vegetation or within 25-feet of the coastal marshland buffer as measured from the Jurisdictional Determination Line without first acquiring the necessary variances and permits."
N/A	N	16	Provide a description of any buffer encroachments and indicate whether a buffer variance is required.
EC-001	Y	17	Clearly note the statement that "Amendments/revisions to the ES&PC Plan which have a significant effect on BMPs with a hydraulic component must be certified by the design professional." *
EC-003	Y	18	Clearly note the statement that "Waste materials shall not be discharged to waters of the State, except as authorized by a Section 404 permit." *
EC-001	Y	19	Clearly note statement that "The escape of sediment from the site shall be prevented by the installation of erosion and sediment control measures and practices prior to land disturbing activities."
EC-001	Y	20	Clearly note statement that "Erosion control measures will be maintained at all times. If full implementation of the approved Plan does not provide for effective erosion control, additional erosion and sediment control measures shall be implemented to control or treat the sediment source."
EC-001	Y	21	Clearly note the statement "Any disturbed area left exposed for a period greater than 14 days shall be stabilized with mulch or temporary seeding."
N/A	N	22	Any construction activity which discharges storm water into an Impaired Stream Segment, or within 1 linear mile upstream of and within the same watershed as, any portion of a Biota Impaired Stream Segment must comply with Part III. C. of the permit. Include the completed Appendix 1 listing all the BMPs that will be used for those areas of the site which discharge to the Impaired Stream Segment. *
N/A	N	23	If a TMDL Implementation Plan for sediment has been finalized for the Impaired Stream Segment (identified in Item 22 above) at least six months prior to submittal of NOI, the ES&PC Plan must address any site-specific conditions or requirements included in the TMDL Implementation Plan. *
EC-001	Y	24	BMPs for concrete washdown of tools, concrete mixer chutes, hoppers and the rear of the vehicles. Washout of the drum at the construction site is prohibited. *
EC-001	Y	25	Provide BMPs for the remediation of all petroleum spills and leaks.
EC-001	Y	26	Description of the measures that will be installed during the construction process to control pollutants in storm water that will occur after construction operations have been completed. *
EC-001	Y	27	Description of practices to provide cover for building materials and building products on site. *
EC-001	Y	28	Description of the practices that will be used to reduce the pollutants in storm water discharges. *
EC-002	Y	29	Description and chart or timeline of the intended sequence of major activities which disturb soils for the major portions of the site (i.e., initial perimeter and sediment storage BMPs, clearing and grubbing activities, excavation activities, utility activities, temporary and final stabilization).
EC-002	Y	30	Provide complete requirements of Inspections and record keeping by the primary permittee. *
EC-003	Y	31	Provide complete requirements of Sampling Frequency and Reporting of sampling results. *
EC-003	Y	32	Provide complete details for Retention of Records as per Part IV.F. of the permit. *
EC-003	Y	33	Description of analytical methods to be used to collect and analyze the samples from each location. *
EC-002	Y	34	Appendix B rationale for NTU values at all outfall sampling points where applicable. *
EC-002	Y	35	Delineate all sampling locations, perennial and intermittent streams and other water bodies into which storm water is discharged. *
EC-001	Y	36	A description of appropriate controls and measures that will be implemented at the construction site including: (1) initial sediment storage requirements and perimeter control BMPs, (2) intermediate grading and drainage BMPs, and (3) final BMPs. For construction sites where there will be no mass grading and the initial perimeter control BMPs, intermediate grading and drainage BMPs, and final BMPs are the same, the Plan may combine all of the BMPs into a single phase. *
EC-201	Y	37	Graphic scale and North arrow.
EC-202	Y	38	Existing and proposed contour lines with contour lines drawn at an interval in accordance with the following:

Map Scale	Ground Slope	Contour Intervals, ft.
1 inch = 100ft or larger scale	Flat 0 - 2%	0.5 or 1
	Rolling 2 - 8%	1 or 2
	Steep 8% +	2,5 or 10

Plan Page #	Included Y/N	No.	Item
N/A	N	39	Use of alternative BMPs whose performance has been documented to be equivalent to or superior to conventional BMPs as certified by a Design Professional (unless disapproved by GAEPD or the Georgia Soil and Water Conservation Commission). Please refer to the Alternative BMP Guidance Document found at www.gaswcc.georgia.gov.
N/A	N	40	Use of alternative BMP for application to the Equivalent BMP List. Please refer to Appendix A-2 of the Manual for Erosion & Sediment Control in Georgia 2016 Edition. *
EC-201	Y	41	Delineation of the applicable 25-foot or 50-foot undisturbed buffers adjacent to state waters and any additional buffers required by the Local Issuing Authority. Clearly note and delineate all areas of impact.
EC-201	Y	42	Delineation of on-site wetlands and all state waters located on and within 200 feet of the project site.
EC-002	Y	43	Delineation and acreage of contributing drainage basins on the project site.
EC-002	Y	44	Provide hydrology study and maps of drainage basins for both the pre- and post-developed conditions. *
EC-001	Y	45	An estimate of the runoff coefficient or peak discharge flow of the site prior to and after construction activities are completed.
EC-202	Y	46	Storm-drain pipe and weir velocities with appropriate outlet protection to accommodate discharges without erosion. Identify/Delineate all storm water discharge points.
EC-002	Y	47	Soil series for the project site and their delineation.
EC-201	Y	48	The limits of disturbance for each phase of construction.
EC-202	Y	49	Provide a minimum of 67 cubic yards of sediment storage per acre drained using a temporary sediment basin, retrofitted detention pond, and/or excavated inlet sediment traps for each common drainage location. Sediment storage volume must be in place prior to and during all land disturbance activities until final stabilization of the site has been achieved. A written justification explaining the decision to use equivalent controls when a sediment basin is not attainable must be included in the Plan for each common drainage location in which a sediment basin is not provided. A written justification as to why 67 cubic yards of storage is not attainable must also be given. Worksheets from the Manual included for structural BMPs and all calculations used by the storage design professional to obtain the required sediment when using equivalent controls. When discharging from sediment basins and impoundments, permittees are required to utilize outlet structures that withdraw water from the surface, unless infeasible. If outlet structures that withdraw water from the surface are not feasible, a written justification explaining this decision must be included in the Plan.
EC-201	Y	50	Location of Best Management Practices that are consistent with and no less stringent than the Manual for Erosion and Sediment Control in Georgia. Use uniform coding symbols from the Manual, Chapter 6, with legend.
EC-401	Y	51	Provide detailed drawings for all structural practices. Specifications must, at a minimum, meet the guidelines set forth in the Manual for Erosion and Sediment Control in Georgia.
EC-402	Y	52	Provide vegetative plan, noting all temporary and permanent vegetative practices. Include species, planting dates and seeding, fertilizer, lime and mulching rates. Vegetative plan shall be site specific for appropriate time of the year that seeding will take place and for the appropriate geographic region of Georgia.

* If using this checklist for a project that is less than 1 acre and not part of a common development but within 200 ft of a perennial stream, the * checklist items would be N/A.

Effective January 1, 2024

1 EC-004 **ES&PC CHECKLIST**
SCALE: N.T.S.

APPENDIX 1

THE ES&PC PLAN MUST INCLUDE AT LEAST FOUR (4) OF THE FOLLOWING BMPS FOR THOSE AREAS OF THE SITE WHICH DISCHARGE TO AN IMPAIRED STREAM SEGMENT AND FOR SITES WHICH EPD HAS APPROVED IN WRITING A REQUEST TO DISTURB 5O ACRES OR MORE AT ANY ONE TIME.

The four items chosen must be appropriate for the site conditions.

Plan Page #	Included Y/N		Item
		a.	During construction activities, double the width of the 25-foot undisturbed vegetated buffer along all State waters requiring a buffer and the 50-foot undisturbed vegetated buffer along all State waters classified as "trout streams" requiring a buffer. During construction activities, EPD will not grant variances to any such buffers that are increased in width.
		b.	Increase all temporary sediment basins and retrofitted storm water management basins to provide sediment storage of at least 3600 cubic feet (134 cubic yards) per acre drained.
		c.	Use baffles in all temporary sediment basins and retrofitted storm water management basins to at least double the conventional flow path length to the outlet structure.
EC-201	Y	d.	A large sign (minimum 4 feet x 8 feet) must be posted on site by the actual start date of construction. The sign must be visible from a public roadway. The sign must identify the following: (1) construction site, (2) the permittee(s), (3) the contact person(s) and telephone number(s), and (4) the permittee-hosted website where the Plan can be viewed must be provided on the submitted NOI. The sign must remain on site and the Plan must be available on the provided website until a NOT has been submitted.
		e.	Use flocculants or coagulants and/or mulch to stabilize areas left disturbed for more than seven (7) calendar days in accordance with **Part III. D.1.** of the current NPDES Permits.
		f.	Conduct turbidity sampling after every rain event of 0.5 inch or greater within any 24-hour period, recognizing the exceptions specified in **Part IV.D.6.d.** of the current NPDES Permits.
		g.	Comply with the applicable end-of-pipe turbidity effluent limit, without the "BMP defense" as provided for in O.C.G.A. 12-7-6 (a)(1).
		h.	Reduce the total planned site disturbance to less than 50% impervious surfaces (excluding any State-mandated buffer areas from such calculations). All calculations must be included on the Plan.
EC-001	Y	i.	Limit the amount of disturbed area at any one time to no greater than 25 acres or 50% of the total planned site, whichever is less. All calculations must be included on the Plan.
		j.	Use "Dirt II" techniques available on the EPD website to model and manage construction storm water runoff (including sheet flow). All calculations must be included on the Plan. (https://epd.georgia.gov/erosion-and-sedimentation)
		k.	Add appropriate organic soil amendments (e.g., compost) and conduct pre- and post-construction soil sampling to a depth of six (6) inches to document improved levels of soil carbon after final stabilization of the construction site.
		l.	Use mulch filter berms, in addition to a silt fence, on the site perimeter wherever construction storm water (including sheet flow) may be discharged. Mulch filter berms cannot be placed in waterways or areas of concentrated flow.
EC-001	Y	m.	Use appropriate erosion control slope stabilization instead of concrete in all construction storm water ditches and storm drainages designed for a 25-year, 24-hour rainfall event.
		n.	Use flocculants or coagulants under a passive dosing method (e.g., flocculant blocks) within construction storm water ditches and storm drainages that feed into temporary sediment basins and retrofitted management basins.
		o.	Install sod for a minimum 20-foot width (in lieu of seeding) after final grade has been achieved, along the site perimeter wherever storm water (including sheet flow) may be discharged.
EC-001	Y	p.	Conduct soil tests to identify and to implement site-specific fertilizer needs.
		q.	Certified personnel for primary permittees shall conduct inspections at least twice every seven (7) calendar days and within 24 hours of the end of the storm that is 0.5 inches rainfall or greater in accordance with **Part IV.D.4.a.(3)(a) – (c)**; secondary permittees, **Part IV.D.4.b.(3)(a) – (c)**; and tertiary permittees **Part IV.D.4.c.(3)(a) – (c)** *
		r.	Apply the appropriate compost blankets (minimum depth 1.5 inches) to protect soil surfaces until vegetation is established during the final stabilization phase of the construction activity.
		s.	Use alternative BMPs whose performance has been documented to be superior to conventional BMPs as certified by a Design Professional (unless disapproved by EPD or the Georgia Soil and Water Conservation Commission). (If using this item please refer to the Alternative BMP guidance document found at *www.gaswcc.georgia.gov*)
		t.	Limit the total planned site disturbance to less than 15% impervious surfaces (excluding any state mandated buffer areas from such calculations). All calculations must be included in the Plan.
		u.	Conduct inspections during the intermediate grading and drainage BMP phase and during the final BMP phase of the project by the design professional who prepared the Plan in accordance with **Part IV.A.5** of the permit. *The Plan must include a statement that the primary permittee must retain the design professional who prepared the Plan to conduct inspections during the intermediate grading and drainage BMP phase and during the final BMP phase.*
		v.	Install Post Construction BMPs (e.g., runoff reduction BMPs) which remove 80% TSS as outlined in the Georgia Stormwater Management Manual known as the Blue Book or an equivalent or more stringent design manual.

Effective January 1, 2024

* This requirement is different for infrastructure projects:
Certified personnel for primary permittees shall conduct inspections at least once every seven (7) calendar days and within 24 hours of the end of the storm that is 0.5 inches rainfall or greater in accordance with Part IV.D.4.a.(3)(a) – (c) of the permit.

2 EC-004 **APPENDIX 1**
SCALE: N.T.S.

KATIE STRICKLAND, P.E.
GASWCC LEVEL II
CERTIFICATION #087240
EXPIRES 03/15/2025

PRIME
A Stratus Team Company
3715 NORTHSIDE PARKWAY NW
BUILDING 300, SUITE 200
ATLANTA, GEORGIA 30327
4 0 4 - 4 2 5 - 7 1 0 0

PROJECT:
DALTON PICKLEBALL COMPLEX
904 CIVIC DR,
DALTON, GA 30721
PREPARED FOR:
CITY OF DALTON, GA

REVISIONS

NO.	DATE	DESCRIPTION

SEAL
GEORGIA REGISTERED PROFESSIONAL ENGINEER No. PE044235 KATHRYN D. STRICKLAND
DATE: 08/09/2024

© 2024 PRIME ENGINEERING, INC.
Scales, as stated hereon, are valid on the original drawing; the dimensions of which are 24 by 36 inches. These scales, noted hereon, are hereby changed by the ratio of the overall sheet dimensions of the print to corresponding dimensions of the original drawing. This drawing is the property of PRIME ENGINEERING, INCORPORATED and is not to be reproduced or copied in whole or in part. It is only to be used for the project and site specifically identified herein and is not to be used on any other project. It is to be returned upon request.

DRAWING TITLE
ES&PC CHECKLIST

DRAWING DATE	DRAWN BY	DRAWING SCALE	DESIGNED BY	PROJECT NUMBER	CHECKED BY
08/09/2024	SY	NOT TO SCALE	KDS	2024-0283	KLK

DRAWING NUMBER
EC-004

NOT ISSUED FOR CONSTRUCTION

R:\A-Z\City of Dalton, GA\2024-0283 Dalton-Pickleball Complex\3 ENGINEERING\Drawings\EC-001 - ESPC NOTES - 2024-0283.dwg Thu, 08/08/24 10:56 AM

B1–HW
30" RCP
W1 = 7.5 FT
W2 = 18.5 FT
La = 16 FT
d50 = 0.5 FT
Q25 = 5.18 CFS
V25 = 1.06 FPS

St-B1 · Fr · Rt · Ss · Sd1-S · Cd · Di · Co · Ds1 · Ds2 · Du

INITIAL LIMITS OF DISTURBANCE = 0.98 AC

EROSION CONTROL LEGEND

CODE	PRACTICE	DETAIL	SYMBOL
Ds1	DISTURBED AREA STABILIZATION (MULCH ONLY)	1/EC–402	Ds1
Ds2	DISTURBED AREA STABILIZATION (TEMPORARY SEEDING)	2/EC–402	Ds2
Ds3	DISTURBED AREA STABILIZATION (PERMANENT SEEDING)	3/EC–402	Ds3
Du	DUST CONTROL ON DISTURBED AREAS	4/EC–401	Du
Ss	SLOPE STABILIZATION	6/EC–402	
Co	CONSTRUCTION EXIT & CONCRETE WASHOUT	1/EC–401	
Sd1-S	TYPE S SEDIMENT BARRIER – 30" HEIGHT	2/EC–401	P–Factor<0.045
Sd2-F	INLET SEDIMENT TRAP FILTER FABRIC & SUPPORT FRAME	3/EC–401	
Fr	FILTER RING	6/C–401	
St	RIP–RAP OUTLET PROTECTION	5/EC–401	St
Cd-S	STONE CHECK DAM	6/EC–402	
Rt	TEMPORARY SEDIMENT BASIN	5/EC–402	Rt
Sk	FLOATING SURFACE SKIMMER	2/EC–403	
Di	DIVERSION	5/EC–403	

GEORGIA811
www.Georgia811.com
Know what's below. Call before you dig.

1 EC-201 **INITIAL ES&PC PLAN**
SCALE:1" = 20'

GRAPHIC SCALE
20 0 10 20 40 80
(IN FEET)
1 inch = 20 ft.

NORTH

R:\A-Z\City of Dalton, GA\2024-0283 Dalton-Pickleball Complex\3 ENGINEERING\Drawings\EC-201 - INITIAL ESPC PLAN - 2024-0283.dwg Thu, 08/08/24 10:56 AM

PRIME
A Stratus Team Company
FIRM NORTHSIDE PARKWAY NW
BUILDING 600, SUITE 200
ATLANTA, GEORGIA 30327
404-425-7100

PROJECT:
DALTON PICKLEBALL COMPLEX
904 CIVIC DR,
DALTON, GA 30721
PREPARED FOR:
CITY OF DALTON, GA

REVISIONS

NO.	DATE	DESCRIPTION

SEAL
GEORGIA REGISTERED No. PE044235 PROFESSIONAL ENGINEER KATHARINE N. SHEPPARD
DATE: 08/09/2024

© 2024 PRIME ENGINEERING, INC. Scales, as stated hereon, are valid on the original drawing; the dimensions of which are 24 by 36 inches. These scales, noted hereon, are hereby changed by the ratio of the overall sheet dimensions of the print to corresponding dimensions of the original drawing. This drawing is the property of PRIME ENGINEERING, INCORPORATED and is not to be reproduced or copied in whole or in part. It is only to be used for the project and site specifically identified herein and is not to be used on any other project. It is to be returned upon request.

DRAWING TITLE
INITIAL ES&PC PLAN

DRAWN BY: SY
DESIGNED BY: KDS
CHECKED BY: KLK
DRAWING DATE: 08/09/2024
DRAWING SCALE: 1" = 20'
PROJECT NUMBER: 2024-0283
DRAWING NUMBER: **EC-201**

NOT ISSUED FOR CONSTRUCTION

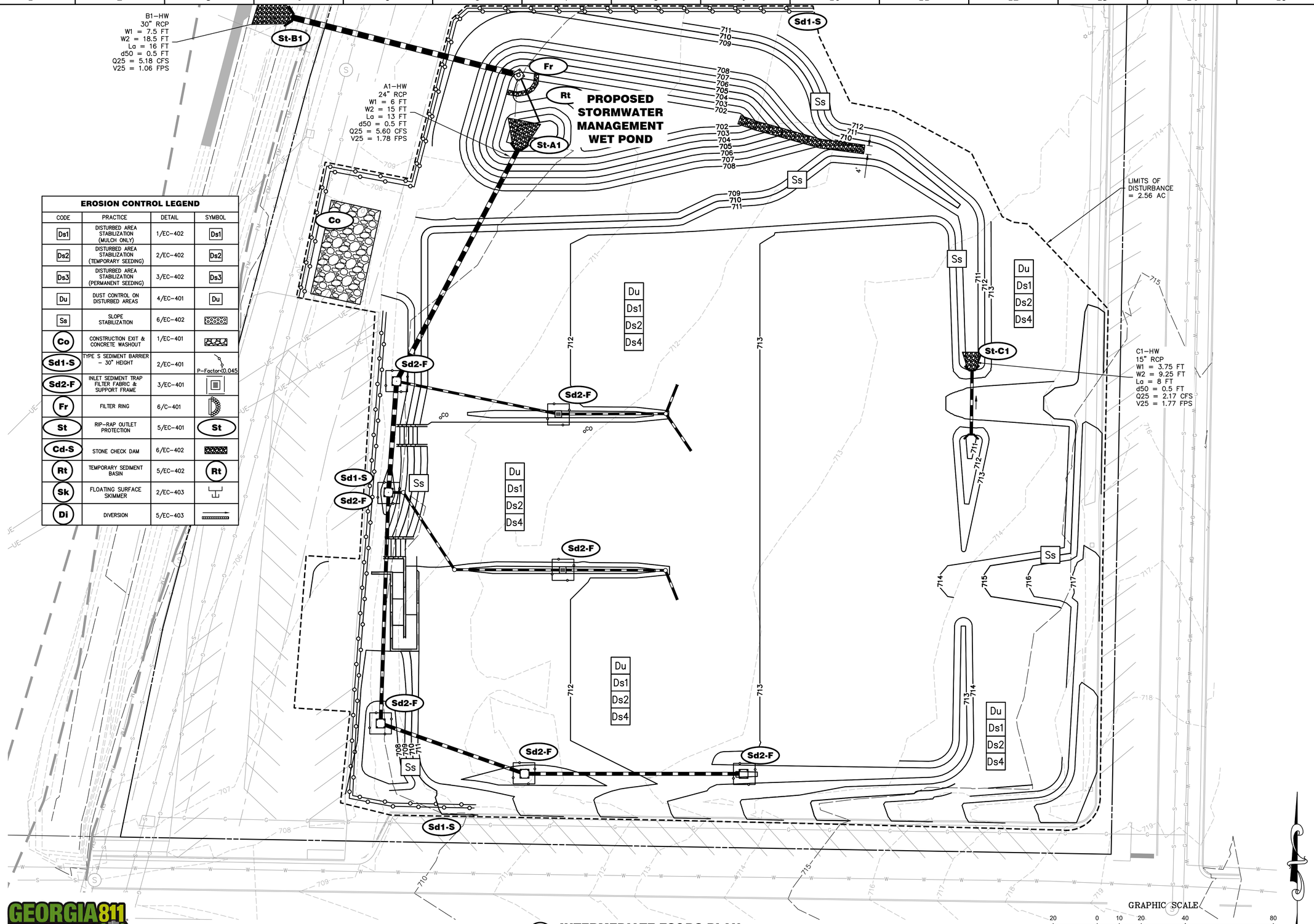

EROSION CONTROL LEGEND

CODE	PRACTICE	DETAIL	SYMBOL
Ds1	DISTURBED AREA STABILIZATION (MULCH ONLY)	1/EC-402	Ds1
Ds2	DISTURBED AREA STABILIZATION (TEMPORARY SEEDING)	2/EC-402	Ds2
Ds3	DISTURBED AREA STABILIZATION (PERMANENT SEEDING)	3/EC-402	Ds3
Du	DUST CONTROL ON DISTURBED AREAS	4/EC-401	Du
Ss	SLOPE STABILIZATION	6/EC-402	
Co	CONSTRUCTION EXIT & CONCRETE WASHOUT	1/EC-401	
Sd1-S	TYPE S SEDIMENT BARRIER - 30" HEIGHT	2/EC-401	P-Factor<0.045
Sd2-F	INLET SEDIMENT TRAP FILTER FABRIC & SUPPORT FRAME	3/EC-401	
Fr	FILTER RING	6/C-401	
St	RIP-RAP OUTLET PROTECTION	5/EC-401	St
Cd-S	STONE CHECK DAM	6/EC-402	
Rt	TEMPORARY SEDIMENT BASIN	5/EC-402	Rt
Sk	FLOATING SURFACE SKIMMER	2/EC-403	
Di	DIVERSION	5/EC-403	

GEORGIA811
www.Georgia811.com
Know what's below. Call before you dig.

1 EC-202 **INTERMEDIATE ES&PC PLAN**
SCALE:1" = 20'

PRIME
A Stratus Team Company
EMS NORTHSIDE PARKWAY NW
BUILDING 600, SUITE 200
ATLANTA, GEORGIA 30327
404.425.7100

PROJECT:
DALTON PICKLEBALL COMPLEX
904 CIVIC DR,
DALTON, GA 30721

PREPARED FOR:
CITY OF DALTON, GA

REVISIONS

NO.	DATE	DESCRIPTION

SEAL

GEORGIA REGISTERED No. PE044235 PROFESSIONAL ENGINEER KATHRYN D. SHEPARD

DATE: 08/09/2024

© 2024 PRIME ENGINEERING, INC. Scales, as stated hereon, are valid on the original drawing; the dimensions of which are 24 by 36 inches. These scales, noted hereon, are hereby changed by the ratio of the overall sheet dimensions of the print to corresponding dimensions of the original drawing. This drawing is the property of PRIME ENGINEERING, INCORPORATED and is not to be reproduced or copied in whole or in part. It is only to be used for the project and site specifically identified herein and is not to be used on any other project. It is to be returned upon request.

DRAWING TITLE
INTERMEDIATE ES&PC PLAN

DRAWING DATE 08/09/2024	DRAWN BY SY	DESIGNED BY KDS	CHECKED BY KLK
DRAWING SCALE 1" = 20'	PROJECT NUMBER 2024-0283		
DRAWING NUMBER **EC-202**			

NOT ISSUED FOR CONSTRUCTION

R:\A-2\City of Dalton, GA\2024-0283 Dalton-Pickleball Complex\3 ENGINEERING\Drawings\EC-202 - INTERMEDIATE ESPC PLAN - 2024-0283.dwg Thu, 08/08/24 10:57 AM

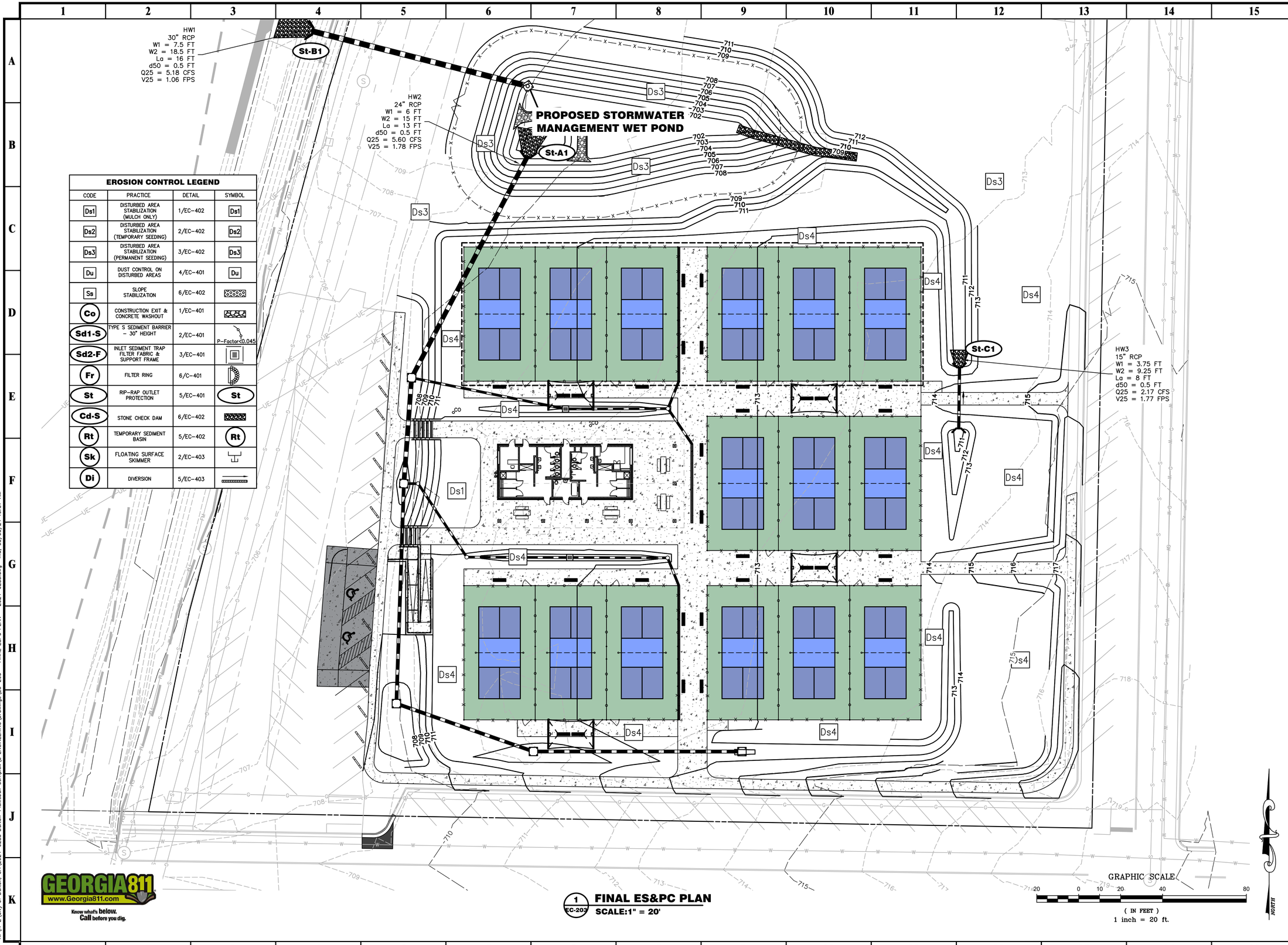

EROSION CONTROL LEGEND

CODE	PRACTICE	DETAIL	SYMBOL
Ds1	DISTURBED AREA STABILIZATION (MULCH ONLY)	1/EC-402	Ds1
Ds2	DISTURBED AREA STABILIZATION (TEMPORARY SEEDING)	2/EC-402	Ds2
Ds3	DISTURBED AREA STABILIZATION (PERMANENT SEEDING)	3/EC-402	Ds3
Du	DUST CONTROL ON DISTURBED AREAS	4/EC-401	Du
Ss	SLOPE STABILIZATION	6/EC-402	
Co	CONSTRUCTION EXIT & CONCRETE WASHOUT	1/EC-401	
Sd1-S	TYPE S SEDIMENT BARRIER - 30" HEIGHT	2/EC-401	P-Factor<0.045
Sd2-F	INLET SEDIMENT TRAP FILTER FABRIC & SUPPORT FRAME	3/EC-401	
Fr	FILTER RING	6/C-401	
St	RIP-RAP OUTLET PROTECTION	5/EC-401	St
Cd-S	STONE CHECK DAM	6/EC-402	
Rt	TEMPORARY SEDIMENT BASIN	5/EC-402	Rt
Sk	FLOATING SURFACE SKIMMER	2/EC-403	
Di	DIVERSION	5/EC-403	

GEORGIA811
www.Georgia811.com
Know what's below. Call before you dig.

1 EC-203 **FINAL ES&PC PLAN**
SCALE:1" = 20'

R:\A-Z\City of Dalton, GA\2024-0283 Dalton-Pickleball Complex\3 ENGINEERING\Drawings\EC-203 - FINAL ESPC PLAN - 2024-0283.dwg Thu, 08/08/24 10:57 AM

PRIME
A Stratus Team Company
FIRM NORTHSIDE PARKWAY NW
BUILDING 600, SUITE 200
ATLANTA, GEORGIA 30327
404.425.7100

PROJECT:
DALTON PICKLEBALL COMPLEX
904 CIVIC DR,
DALTON, GA 30721

PREPARED FOR:
CITY OF DALTON, GA

REVISIONS		
NO.	DATE	DESCRIPTION

SEAL
GEORGIA REGISTERED No. PE044235 PROFESSIONAL ENGINEER KATHRYN D. SHEPPARD
DATE: 08/09/2024

© 2024 PRIME ENGINEERING, INC. Scales, as stated hereon, are valid on the original drawing; the dimensions of which are 24 by 36 inches. These scales, noted hereon, are hereby changed by the ratio of the overall sheet dimensions of the print to corresponding dimensions of the original drawing. This drawing is the property of PRIME ENGINEERING, INCORPORATED and is not to be reproduced or copied in whole or in part. It is only to be used for the project and site specifically identified herein and is not to be used on any other project. It is to be returned upon request.

DRAWING TITLE
FINAL ES&PC PLAN

DRAWING DATE	DRAWN BY	DESIGNED BY	CHECKED BY
08/09/2024	SY	KDS	KLK
DRAWING SCALE 1" = 20'			
PROJECT NUMBER 2024-0283			
DRAWING NUMBER EC-203			

NOT ISSUED FOR CONSTRUCTION

CRUSHED STONE CONSTRUCTION EXIT

EXIT DIAGRAM

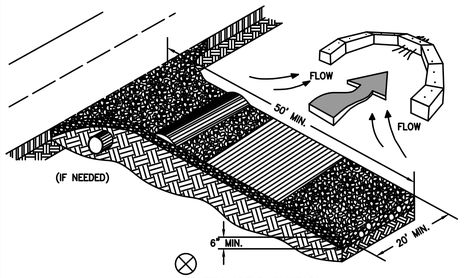

ENTRANCE ELEVATION

NOTES:
1. AVOID LOCATING ON STEEP SLOPES OR AT CURVES ON PUBLIC ROADS.
2. REMOVE ALL VEGETATION AND OTHER UNSUITABLE MATERIAL FROM THE FOUNDATION AREA, GRADE, AND CROWN FOR POSITIVE DRAINAGE.
3. AGGREGATE SIZE SHALL BE IN ACCORDANCE WITH NATIONAL STONE ASSOCIATION R-2 (1.5"-3.5" STONE).
4. GRAVEL PAD SHALL HAVE A MINIMUM THICKNESS OF 6".
5. PAD WIDTH SHALL BE EQUAL FULL WIDTH AT ALL POINTS OF VEHICULAR EGRESS, BUT NO LESS THAN 20'.
6. A DIVERSION RIDGE SHOULD BE CONSTRUCTED WHEN GRADE TOWARD PAVED AREA IS GREATER THAN 2%.
7. INSTALL PIPE UNDER THE ENTRANCE IF NEEDED TO MAINTAIN DRAINAGE DITCHES.
8. WHEN WASHING IS REQUIRED, IT SHOULD BE DONE ON AN AREA STABILIZED WITH CRUSHED STONE THAT DRAINS INTO AN APPROVED SEDIMENT TRAP OR SEDIMENT BASIN (DIVERT ALL SURFACE RUNOFF AND DRAINAGE FROM THE ENTRANCE TO A SEDIMENT CONTROL DEVICE).
9. WASHRACKS AND/OR TIRE WASHERS MAY BE REQUIRED DEPENDING ON SCALE AND CIRCUMSTANCE. IF NECESSARY, WASHRACK DESIGN MAY CONSIST OF ANY MATERIAL SUITABLE FOR TRUCK TRAFFIC THAT REMOVE MUD AND DIRT.
10. MAINTAIN AREA IN A WAY THAT PREVENTS TRACKING AND/OR FLOW OF MUD ONTO PUBLIC RIGHTS-OF-WAYS. THIS MAY REQUIRE TOP DRESSING, REPAIR AND/OR CLEANOUT OF ANY MEASURES USED TO TRAP SEDIMENT.

1 EC-401 CONSTRUCTION EXIT — N.T.S. — Co

SILT FENCE - TYPE SENSITIVE

SIDE VIEW

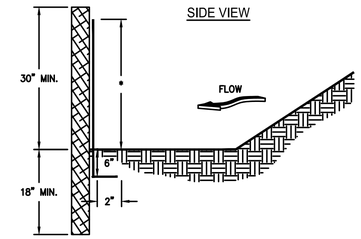

FRONT VIEW

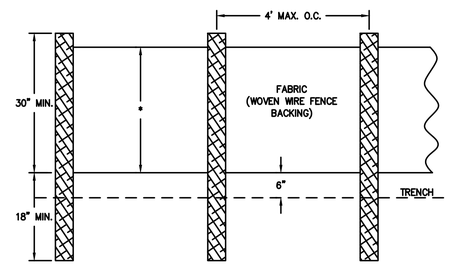

NOTES:
1. USE STEEL OR WOOD POSTS OR AS SPECIFIED BY THE EROSION, SEDIMENTATION, AND POLLUTION CONTROL PLAN.
2. HEIGHT (*) IS TO BE SHOWN ON THE EROSION, SEDIMENTATION, AND POLLUTION CONTROL PLAN.

2 EC-401 SEDIMENT BARRIER - SENSITIVE — N.T.S. — Sd1-S

FABRIC AND SUPPORTING FRAME FOR INLET PROTECTION

STEEL FRAME AND SILT FENCE INSTALLATION

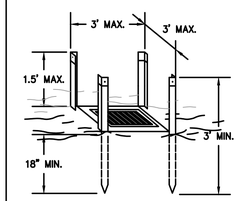

NOTES:
1. DESIGN IS FOR SLOPES NO GREATER THAN 5% (NOT DESIGNED FOR CONCENTRATED FLOWS).
2. THE STEEL POSTS SUPPORTING THE SILT FENCE MATERIAL SHOULD BE SPACED EVENLY AROUND THE PERIMETER OF THE INLET (MAXIMUM OF 3' APART).
3. THE STEEL POSTS SHOULD BE SECURELY DRIVEN AT LEAST 18" DEEP.
4. THE FABRIC SHOULD BE ENTRENCHED AT LEAST 12" AND THEN BACKFILLED WITH CRUSHED STONE OR COMPACTED SOIL.

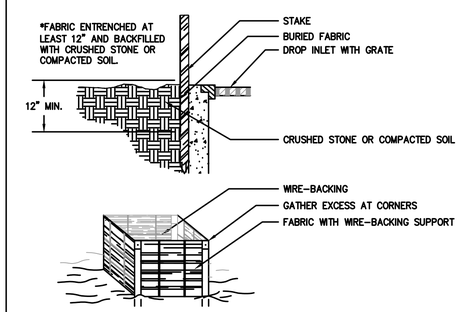

3 EC-401 FILTER FABRIC WITH SUPPORTING FRAME — N.T.S. — Sd2-F

DEFINITION

Controlling surface and air movement of dust on construction sites, roads, and demolition sites.

CONDITIONS

This practice is applicable to areas subject to surface and air movement of dust where on and off-site damage may occur without treatment.

METHOD AND MATERIALS

A. TEMPORARY METHODS

Mulches. See standard Ds1 - Disturbed Area Stabilization (With Mulching Only). Synthetic resins may be used instead of asphalt to bind mulch material. Refer to standard Tb-Tackifiers and Binders. Resins such as Curasol or Terratack should be used according to manufacturer's recommendations.

Vegetative Cover. See standard Ds2 - Disturbed Area Stabilization (With Temporary Seeding).

Spray-on Adhesives. These are used on mineral soils (not effective on muck soils). Keep traffic off these areas. Refer to standard Tb-Tackifiers and Binders.

Tillage. This practice is designed to roughen and bring clods to the surface. It is an emergency measure which should be used before wind erosion starts. Begin plowing on windward side of site. Chisel-type plows spaced about 12 inches apart, spring-toothed harrows, and similar plows are examples of equipment which may produce the desired effect.

Irrigation. This is generally done as an emergency treatment. Site is sprinkled with water until the surface is wet. Repeat as needed.

Barriers. Solid board fences, snow fences, burlap fences, crate walls, bales of hay and similar material can be used to control air currents and soil blowing. Barriers placed at right angles to prevailing currents at intervals of about 15 times their height are effective in controlling wind erosion.

Calcium Chloride. Apply at rate that will keep surface moist. May need retreatment.

B. PERMANENT METHODS

Permanent Vegetation. See standard Ds3 -Disturbed Area Stabilization (With Permanent Vegetation). Existing trees and large shrubs may afford valuable protection if left in place.

Topsoiling. This entails covering the surface with less erosive soil material. See standard Tp - Topsoiling.

Stone. Cover surface with crushed stone or coarse gravel. See standard Cr-Construction Road Stabilization.

Du — DUST CONTROL ON DISTURBED AREAS

4 EC-401 DUST CONTROL ON DISTURBED AREAS — N.T.S. — Du

RIPRAP OUTLET PROTECTION

PIPE OUTLET TO FLAT AREA -- NO WELL DEFINED CHANNEL

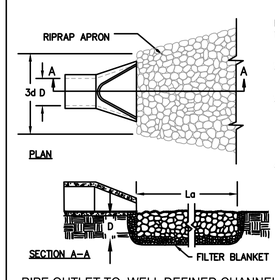

NOTES:
1. La IS THE LENGTH OF THE RIPRAP APRON.
2. D = 1.5 TIMES THE MAXIMUM STONE DIAMETER BUT NOT LESSTHAN 6".
3. IN A WELL-DEFINED CHANNEL, EXTEND THE APRON UP THE CHANNEL BANKS TO AN ELEVATION OF 6" ABOVE THE MAXIMUM TAILWATER DEPTH OR TO THE TOP OF THE BANK (WHICHEVER IS LESS).
4. A FILTER BLANKET OR FILTER FABRIC SHOULD BE INSTALLED BETWEEN THE RIPRAP AND THE SOIL FOUNDATION.

PIPE OUTLET TO WELL DEFINED CHANNEL

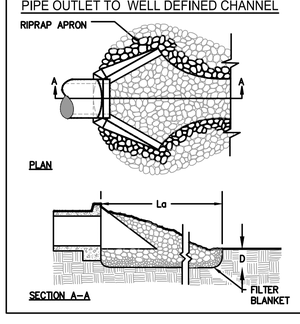

5 EC-401 STORM DRAIN OUTLET PROTECTION — N.T.S. — St

STONE FILTER RING

PERSPECTIVE VIEW

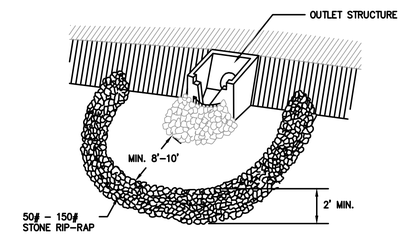

PLAN VIEW (NOT TO SCALE)

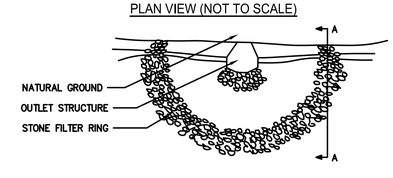

CROSS SECTION (NOT TO SCALE)

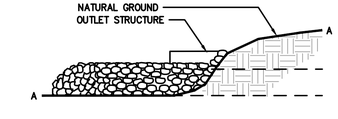

6 EC-401 STONE FILTER RING — N.T.S. — Fr

PRIME
A Stratus Team Company
6155 NORTHSIDE PARKWAY NW
BUILDING 600, SUITE 200
ATLANTA, GEORGIA 30327
404-425-7100

PROJECT:
DALTON PICKLEBALL COMPLEX
904 CIVIC DR,
DALTON, GA 30721

PREPARED FOR:
CITY OF DALTON, GA

REVISIONS

NO.	DATE	DESCRIPTION

SEAL

GEORGIA REGISTERED PROFESSIONAL ENGINEER No. PE034235 KATHRYN D. SHERCHAN

DATE: 08/09/2024

© 2024 PRIME ENGINEERING, INC. Scales, as stated hereon, are valid on the original drawing; the dimensions of which are 24 by 36 inches. These scales, noted hereon, are hereby changed by the ratio of the overall sheet dimensions of the print to corresponding dimensions of the original drawing. This drawing is the property of PRIME ENGINEERING, INCORPORATED and is not to be reproduced or copied in whole or in part. It is only to be used for the project and site specifically identified herein and is not to be used on any other project. It is to be returned upon request.

DRAWING TITLE

ES&PC DETAILS

DRAWING DATE	08/09/2024
DRAWING SCALE	AS NOTED
PROJECT NUMBER	2024-0283
DRAWING NUMBER	EC-401
DRAWN BY	SY
DESIGNED BY	KDS
CHECKED BY	KLK

NOT ISSUED FOR CONSTRUCTION

R:\A-Z\City of Dalton, GA\2024-0283 Dalton-Pickleball Complex\3 ENGINEERING\Drawings\EC-401 - ESPC DETAILS - 2024-0283.dwg Thu, 08/08/24 10:58 AM

DISTURBED AREA STABILIZATION (MULCHING) Ds1

1 EC-402 N.T.S.

MULCHING APPLICATION FOR TEMPORARY STABILIZATION Ds1

MATERIAL	APPLICATION
STRAW OR HAY	APPLY AT A DEPTH OF 2" TO 4" AT A RATE OF 2.5 TONS/ACRE FOR HAY AND 2 TONS/ACRE FOR STRAW
WOOD WASTE, CHIPS, SAWDUST, BARK	APPLY AT A DEPTH OF 2" TO 3"
CUTBACK ASPHALT	APPLY AT A RATE OF 1200 GAL/ACRE OR 0.25 GAL/SY.
POLYETHYLENE FILM	APPLY PER MANUFACTURE'S RECOMMENDATION

DISTURBED AREA STABILIZATION (TEMPORARY SEEDING) Ds2

2 EC-402 N.T.S.

Ds2 SEEDING RATES FOR TEMPORARY SEEDINGS

SPECIES	RATE PER 1000 SF	RATE PER ACRE	PLANTING DATES MTS–L'STONE	PIEDMONT	COASTAL
RYE					
ALONE	168 LBS.	3.9 LBS	8/15–12/1	9/1–1/1	9/15–3/1
IN MIXTURES	28 LBS.	0.6 LBS	8/15–12/1	9/1–1/1	9/15–3/1
ANNUAL RYEGRASS					
ALONE	40 LBS.	0.9 LB	8/15–11/15	9/1–12/1	9/15–1/1

UNUSUAL SITE CONDITION MAY REQUIRED HEAVIER SEEDING RATES. SEEDING DATES MAY NEED TO BE ALTERED TO FIT TEMPERATURE VARIATIONS AND LOCAL CONDITIONS.

DISTURBED AREA STABILIZATION (PERMANENT SEEDING) Ds3

3 EC-402 N.T.S.

Ds3 PERMANENT SEEDING FOR WET AREAS

SPECIES	RATE PER 1000 SQ. FT.	RATE PER ACRE	PLANTING DATES MTS–L'STONE	PIEDMONT	COASTAL
MAIDENCANE SPRIGS	3' x 3' SPACING		2/1–3/31	2/1–3/31	2/1–3/31
REED CANARY GRASS					
ALONE	1.1 LBS.	50 LBS.	8/15–10/15	9/1–10/15	
WITH OTHER PERENNIALS	0.7 LBS.	30 LBS.	8/15–10–15	9/1–10/15	
SWITCH GRASS	0.4 LBS.	20 LBS.	4/1–5/31	4/1–5/31	4/1–5/31

RATES ARE FOR BROADCAST SEED ONLY. IF A SEED DRILL IS USED, REDUCE RATES BY ONE–HALF. UNUSUAL SITE CONDITIONS AMY REQUIRE HEAVIER SEEDING RATES. SEEDING DATES MAY NEED TO BE ALTERED TO FIT TEMPERATURE VARIATIONS AND LOCAL CONDITIONS.

Ds3 FERTILIZER RATES

TYPES OF SPECIES	PLANTING YEAR	PLANTING DATES FERTILIZER (N–P–K)	RAT LBS./ACRE	N TOP DRESSING RATE (LBS./ACRE)
COOL SEASON GRASSES	FIRST SECOND MAINTENANCE	6–12–12 6–12–12 10–10–10	1500 1000 400	50–100 30
COOL SEASON GRASSES AND LEGUMES	FIRST SECOND MAINTENANCE	6–12–12 0–10–10 0–10–10	1500 1000 400	0–50
WARM SEASON GRASSES	FIRST SECOND MAINTENANCE	6–12–12 6–12–12 10–10–10	1500 800 400	50–100 50–100 30
WARM SEASON GRASSES AND LEGUMES	FIRST SECOND MAINTENANCE	6–12–12 0–10–10 0–10–10	1500 1000 400	50

Ds3 LIME RATES AND ANALYSIS

1. WHERE PERMANENT VEGETATION IS TO BE ESTABLISHED, AGRICULTURAL LIME SHALL BE APPLIED AS INDICATED BY SOIL TEST OR AT THE RATE OF 1 TO 2 TONS PER ACRE. AGRICULTURAL LIME SHALL BE WITHIN THE SPECIFICATIONS OF THE GEORGIA DEPARTMENT OF AGRICULTURE.
   LIME SPREAD BY CONVENTIONAL EQUIPMENT WILL BE "GROUND LIMESTONE." GROUND LIMESTONE IS CALCITIC OR DOLOMITIC LIMESTONE GROUND SO THAT 90% OF THE MATERIAL WILL PASS THROUGH A 10–MESH SIEVE, NOT LESS THAN 50% WILL PASS THROUGH A 50–MESH SIEVE AND NOT LESS THAN 25% WILL PASS THROUGH A 100–MESH SIEVE.
   AGRICULTURAL LIME SPREAD BY HYDRAULIC SEEDING EQUIPMENT WILL BE "FINELY GROUND LIMESTONE." FINELY GROUND LIMESTONE IS CALCITIC OR DOLOMITIC LIMESTONE GROUND SO THAT 98% OF THE MATERIAL WILL PASS THROUGH A 20–MESH SIEVE AND NOT LESS THAN 70% WILL PASS THROUGH A 100–MESH SIEVE.
   IT IS DESIRABLE TO USE DOLOMITIC LIMESTONE IN THE SAND HILLS, SOUTHERN COASTAL PLAIN AND ATLANTIC COAST FLATWOODS MLRAS.
2. NO AGRICULTURAL LIME IS REQUIRED WHERE ONLY TEMPORARY SEEDING IS TO BE DONE OR WHERE ONLY TREES ARE PLANTED.

Ds3 SEEDING RATES FOR PERMANENT SEEDINGS

SPECIES	RATE PER 1000 SQ. FT.	RATE PER ACRE	PLANTING DATES MTS–L'STONE	PIEDMONT	COASTAL
COMMON BERMUDAGRASS					
HULLED SEED					
ALONE OR WITH ANNUALS	10 LBS.	0.2 LBS.		4/1–5/31	3/15–5/31
WITH OTHER PERENNIALS	6 LBS.	0.1 LBS.		4/1–5/31	3/15–5/31
TALL FESCUE					
ALONE	50 LBS.	1.1 LBS.	3/1–4/15	8/15–9/30	8/15–10/15
WITH OTHER PERENNIALS	30 LBS.	0.7 LBS.	3/1–4/15	8/15–9/30	8/15–10/15

UNUSUAL SITE CONDITIONS MAY REQUIRE HEAVIER SEEDING RATES. SEEDING DATES MAY NEED TO BE ALTERED TO FIT TEMPERATURE VARIATIONS AND LOCAL CONDITIONS.

Ds3 SYMBOL USED ON PLANS

PERFORATED HALF-ROUND PIPE WITH STONE FILTER

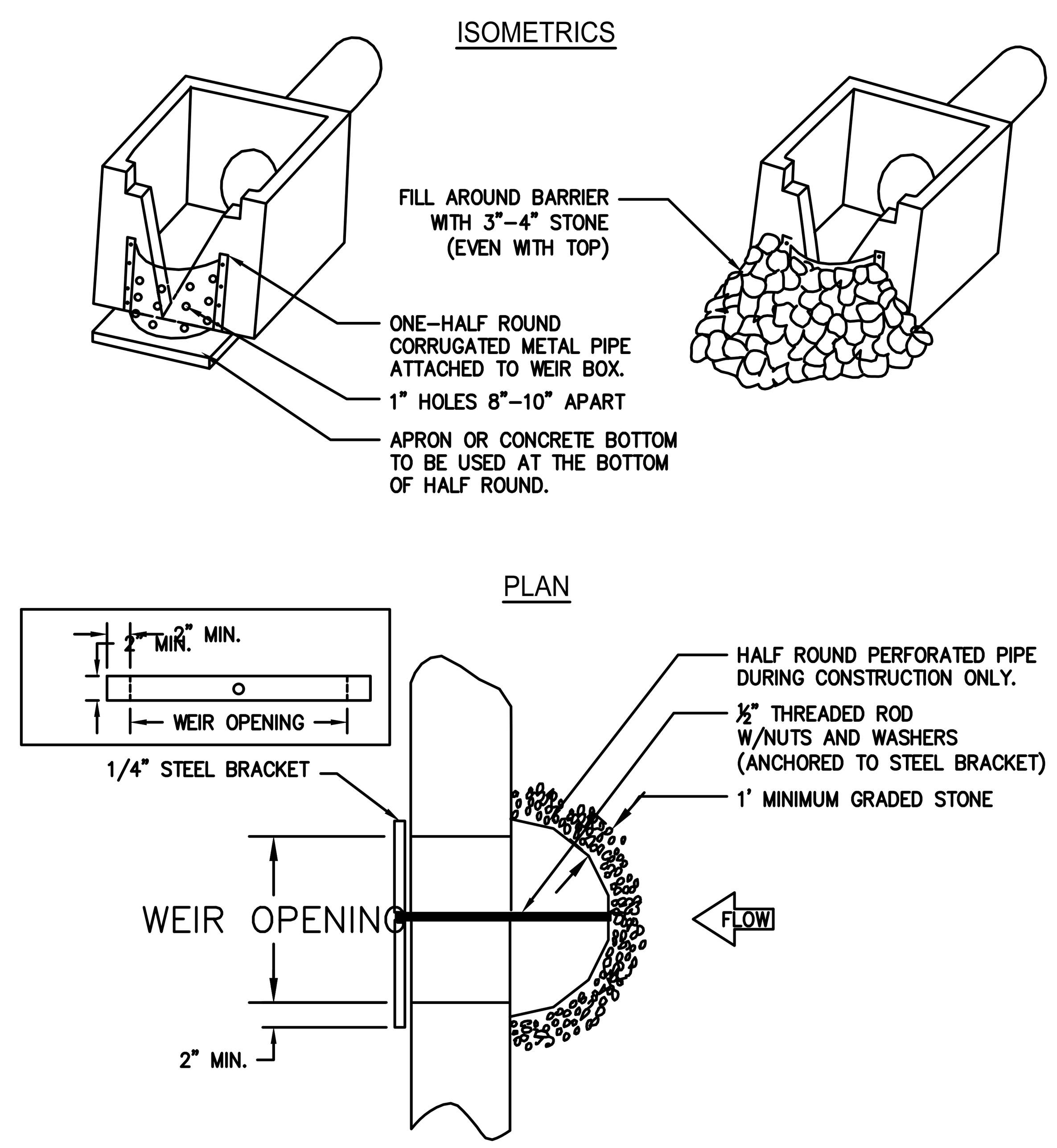

RETROFIT

5 EC-402 N.T.S.

Rt

TO BE SHOWN ON THE EROSION AND SEDIMENT CONTROL PLAN

Storage Calculations

1. Required stormwater storage = 799 cy = 21,581 CF
   (as determined by local ordinance)
2. Required sediment storage = 172 cy = 4,644 CF
   (67 cy/ac * 2.56 ac disturbed area)
3. Total required storage = (1) + (2) = (3) cy = 971 CY = 26,217 CF
4. Available storage = (4) cy = 1,061 CY = 28,649 CF
5. Is the available storage (4) greater than the total required storage (3)?
   X yes ______ no
6. If "no", the sediment storage capacity of the pond must be increased. Choose the method to be used:
   ______ Raise the invert of the outlet structure ______ inches
   ______ Undercut the pond ______ feet
   ______ Other ______
7. Clean-out elevation = 701.6 ft
   (Elevation corresponding to 22 cy/ac * 2.56 ac disturbed area)
8. Is the length-width ratio 2:1 or greater?
   X yes ______ no
9. If "no", the length of flow must be increased. Choose the method to be used:
   ______ Baffles (Type of baffle: ______)
   ______ Other ______

Note the CMP diameter and height if a half-round CMP retrofit is to be used.
Diameter = N/A inches Height = N/A feet

RETROFIT CALCULATION

5 EC-402 N.T.S.

DEFINITION

A permanent vegetation using sods on highly erodible or critically eroded lands.

CONDITIONS

This application is appropriate for areas which require immediate vegetative covers, drop inlets, grass swales, and waterways with intermittent flow .

CONSTRUCTION SPECIFICATIONS INSTALLATION

Soil Preparation

- Bring soil surface to final grade. Clear surface of trash, woody debris, stones and clods larger than 1". Apply sod to soil surfaces only and not frozen surfaces, or gravel type soils.
- Topsoil properly applied will help guarantee stand. Don't use topsoil recently treated with herbicides or soil sterilants.
- Mix fertilizer into soil surface. Fertilize based on soil tests or Table 6-6.1. For fall planting of warm season species, half the fertilizer should be applied at planting and the other half in the spring.

Table 6-6.1. Fertilizer Requirements for Soil Surface Application

Fertilizer Type (lbs./acre)	Fertilizer Rate (lbs./acre)	Fertilizer Rate	Season
10-10-10	1000	.025	Fall

- Agricultural lime should be applied based on soil tests or at a rate of 1 to 2 tons per acre.

Installation

- Lay sod with tight joints and in straight lines. Don't overlap joints. Stagger joints and do not stretch sod.
- On slopes steeper than 3:1, sod should be anchored with wooden or biodegradable pins or other approved methods.
- Installed sod should be rolled or tamped to provide good contact between sod and soil.
- Irrigate sod and soil to a depth of 4" immediately after installation.
- Sod should not be cut or spread in extremely wet or dry weather.
- Irrigation should be used to supplement rainfall for a minimum of 2-3 weeks.

Ds4 DISTURBED AREA STABILIZATION (WITH SODDING)

MATERIALS

- Sod selected should be certified. Sod grown in the general area of the project is desirable.
- Sod should be machine cut and contain 3/4" ±1/4" of soil, not including shoots or thatch.
- Sod should be cut to the desired size within ±5%. Torn or uneven pads should be rejected.
- Sod should be cut and installed within 36 hours of digging.
- Avoid planting when subject to frost heave or hot weather if irrigation is not available.
- The sod type should be shown on the plans or installed according to Table 6-6.2. See Figure 6-4.1 for your Resource Area.

Table 6-6.2. Sod Planting Requirements

Grass	Varieties	Resource Area	Growing Season
Bermudagrass	Common Tifway Tifgreen Tiflawn	M-L,P,C P,C P,C P,C	Warm Weather
Bahiagrass	Pensacola	P,C	Warm Weather
Centipede	-	P,C	Warm Weather
St. Augustine	Common Bitterblue Raleigh	C	Warm Weather
Zoysia	Emerald Myer	P,C	Warm Weather
Tall Fescue	Kentucky	M-L,P	Cool Weather

MAINTENANCE

- Re-sod areas where an adequate stand of sod is not obtained.
- New sod should be mowed sparingly. Grass height should not be cut less than 2"-3" or as specified.
- Apply one ton of agricultural lime as indicated by soil test or every 4-6 years.
- Fertilize grasses in accordance with soil tests or Table 6-6.3.

Table 6-6.3. Fertilizer Requirements for Sod

Types of Species	Planting Year	Fertilizer (N-P-K)	Rate (lbs./acre)	Nitrogen Top Dressing Rate (lbs./acre)
Cool Season Grasses	First Second Maintenance	6-12-12 6-12-12 10-10-10	1500 1000 400	50-100 - 30
Warm Season Grasses	First Second Maintenance	6-12-12 6-12-12 10-10-10	1500 800 400	50-100 50-100 30

DISTURBED AREA STABILIZATION (SODDING) Ds4

4 EC-402 N.T.S.

PRIME
A Stratus Team Company
3715 NORTHSIDE PARKWAY NW
BUILDING 300, SUITE 200
ATLANTA, GEORGIA 30327
404-425-7100

PROJECT:
DALTON PICKLEBALL COMPLEX
904 CIVIC DR,
DALTON, GA 30721

PREPARED FOR:
CITY OF DALTON, GA

REVISIONS NO.	DATE	DESCRIPTION

SEAL
GEORGIA REGISTERED PROFESSIONAL ENGINEER No. PE044235 KATHRYN D. STRICKLAND
DATE: 08/09/2024

© 2024 PRIME ENGINEERING, INC. Scales, as stated hereon, are valid on the original drawing; the dimensions of which are 24 by 36 inches. These scales, noted hereon, are hereby changed by the ratio of the overall sheet dimensions of the print to corresponding dimensions of the original drawing. This drawing is the property of PRIME ENGINEERING, INCORPORATED and is not to be reproduced or copied in whole or in part. It is only to be used for the project and site specifically identified herein and is not to be used on any other project. It is to be returned upon request.

DRAWING TITLE
ES&PC DETAILS

DRAWING DATE 08/09/2024	DRAWN BY SY
DRAWING SCALE AS NOTED	DESIGNED BY KDS
PROJECT NUMBER 2024-0283	CHECKED BY KLK

DRAWING NUMBER
EC-402

NOT ISSUED FOR CONSTRUCTION

R:\A-Z\City of Dalton, GA\2024-0283 Dalton-Pickleball Complex\3 ENGINEERING\Drawings\EC-401 - ESPC DETAILS - 2024-0283.dwg Thu, 08/08/24 10:58 AM

GENERAL NOTES

GENERAL:

1. ALL REFUSE FROM NEW PLANT INSTALLATIONS IS TO BE DISPOSED OF OFF SITE. NO RESIDUAL CONSTRUCTION REFUSE IS TO BE DISPOSED OF ON OWNER'S PROPERTY.
2. NO TRENCHING ALLOWED IN TREE SAVE AREAS FOR ANY PURPOSE – INCLUDING IRRIGATION OR FOR INSTALLATION OF THE TREE SAVE FENCE.
3. PROPERTY OWNER SHALL BE RESPONSIBLE FOR THE CARE AND MAINTENANCE OF THE TREES AND LANDSCAPING THAT FRONT THEIR PROPERTY WITHIN THE ROW.
4. IT IS THE OWNER'S RESPONSIBILITY TO MAINTAIN THE VEGETATION AND REMOVE TRASH AND DEBRIS AROUND THE PERIMETER OF THE PROJECT, EVEN WITHIN A PUBLIC ROW, IN ACCORDANCE WITH THE CITY OF ALPHARETTA PROPERTY MAINTENANCE CODES.
5. ALL NEW PLANT MATERIALS SHALL SATISFY THE REQUIREMENTS OF "NO. 1" OR BETTER AS DEFINED IN THE MOST CURRENT EDITION OF "AMERICAN STANDARDS FOR NURSERY STOCK" OR EQUIVALENT IN QUALITY TO A FLORIDA #1 GRADE OR BETTER. ALL TREES OF LESSER QUALITY WILL BE REJECTED BY THE ARBORIST.
6. PLANT SIZES (CALIPER, HEIGHT AND CONTAINER SIZES) MUST MATCH THE SIZES SHOWN IN THE PLANT SCHEDULE. PLANTS THAT DO NOT MEET THESE MINIMUMS WILL NOT BE ACCEPTED.
7. PLANT HEIGHT MEASUREMENT IS TAKEN AT THE TOP OF THE MAIN BODY OF THE PLANT AND NOT AT THE TIP OF THE TOPMOST GROWTH.
10. ALL NEW PLANT MATERIAL TO BE TEMPORARILY STOCKPILED ONSITE IS TO BE STORED AWAY FROM CONCRETE OR ASPHALT SURFACES AND REGULARLY WATERED.
11. PARKING ISLANDS ARE TO BE EXCAVATED TO A 3 FOOT DEPTH OR 6 INCHES GREATER THAN THE HEIGHT OF THE ROOTBALL AND BACKFILLED WITH FRIABLE SOIL.
12. PLANTING SOIL SHALL BE A MIXTURE OF 1 PART ORIGINAL SOIL BROKEN TO A FINE CONSISTENCY TO 1 PART MR NATURAL CLM PER SOIL MIX RECOMMENDATION PROVIDED ON THIS SHEET.
13. ALL AREAS INCLUDING NEWLY PLANTED TREES, SHRUBS, ANNUALS, AND GROUND COVERS SHALL BE MULCHED WITH A 2 – 3" THICK LAYER UNLESS NOTED OTHERWISE. A 4" LAYER OF MULCH IS REQUIRED FOR THE CRZ OF SPECIMEN TREES, TREES OF QUALITY, AND TREE GROUPINGS.
14. MULCH MUST BE APPLIED PRIOR TO START OF CONSTRUCTION AND SHALL NOT BE PLACED DIRECTLY AGAINST TREE OR SHRUB TRUNKS. A SIX INCH RING WITH NO MULCH SHOULD ENCIRCLE EACH TREE OR SHRUB TRUNK.
15. ALL MULCH MUST BE ORGANIC MULCH CONSISTING OF FINE, SHREDDED HARDWOOD. BARK OR PINE NEEDLES SHOULD BE AVOIDED AS THEY WILL FLOAT AWAY. SYNTHETIC MULCH IS NOT APPROVED FOR USE BY THE CITY.
16. THE CITY ARBORIST MUST INSPECT, VERIFY, AND APPROVE THE LANDSCAPE HAS BEEN PLANTED PER THE APPROVED PLANS AND CITY STANDARDS BEFORE THE ISSUANCE OF A CERTIFICATE OF COMPLETION.
17. IF AT TIME OF FINAL CO INSPECTION, SCREENING FOR DETENTION POND IS NOT ADEQUATE, ADDITIONAL PLANTINGS WILL BE ADDED.
18. IF LANDSCAPE CONTRACTOR IS UNABLE TO SOURCE ANY OF THE PLANT MATERIAL, CONTRACTOR MAY PROPOSE IN WRITING AN ALTERNATIVE TO THE LANDSCAPE ARCHITECT AND CITY ARBORIST FOR APPROVAL.

TREES:

1. TREES ARE TO BE INSPECTED PRIOR TO PLANTING BY OWNER'S DESIGNEE.
2. TREES LESS THAN THE CALIPER INCH SHOWN IN PLANT SCHEDULE WILL NOT BE ACCEPTED. I.E.: 3 INCH CALIPER TREES MUST BE 3 INCHES OR LARGER.
3. ALL NEWLY PLANTED TREES SHALL HAVE VISIBLE ROOT FLARES AT FINISHED GRADE. NO CIRCLING ROOTS SHALL BE ALLOWED ON PLANTED TREES. THE UPPER TWO RINGS OF THE WIRE BASKET, ALL BURLAP, AND STRAPPING MUST BE CUT AND REMOVED PRIOR TO BACKFILL. ALL STAKING, NAILS AND FASTENERS SHOULD ALSO BE REMOVED.
4. ROOT BALL LEVEL SHALL BE HIGH ENOUGH (3" ABOVE FINISHED GRADE) TO ACCOMMODATE FOR PERIODIC SETTLING AND AVOID RESULTING SOIL DEPRESSIONS.
5. EACH NEW TREE SHALL HAVE A THREE TO SIX INCH TAMPED EARTH SAUCER THREE FEET IN RADIUS FROM THE TRUNK AS PER THE TREE PLANTING STANDARD DETAIL ON SHEET L-401.
6. TREE GUYS SHALL BE FABRIC STRAP TIES.
7. ALL TREE GUYS AND STAKES SHALL BE REMOVED FROM TREE AFTER ONE COMPLETE GROWING SEASON OR ONE YEAR AFTER PLANTING, WHICHEVER IS GREATER.

SHRUBS:

1. ALL SHRUBS AND GROUNDCOVERS TO BE PLANTED IN A TRIANGULAR ARRANGEMENT PER STD L-7 ON SHEET L-402 UNLESS OTHERWISE SHOWN ON LANDSCAPE PLAN.
2. SHRUB HEIGHT MEASUREMENT IS TAKEN AT THE TOP OF THE MAIN BODY OF THE SHRUB (NOT AT THE TIP OF THE TOPMOST GROWTH) TO THE TOP OF THE SOIL AND NOT TO THE BOTTOM OF THE CONTAINER.

GRASSING NOTES

AREAS TO BE GRASSED IN BERMUDA:

1. FOR INSTALLATIONS BETWEEN MAY 1 AND AUGUST 15 APPLY HULLED CYNONDON DACTYLON (COMMON BERMUDAGRASS) SEED.
2. FOR INSTALLATIONS BETWEEN NOVEMBER 2 AND FEBRUARY 15 APPLY A SEED MIXTURE OF UNHULLED CYNODON DACTYLON (COMMON BERMUDAGRASS AND LOLIUM MULTIFLORUM (ANNUAL RYEGRASS)).
3. SEED SHOULD BE DELIVERED TO SITE IN UNSEALED STANDARD SIZED CONTAINERS SHOWING WEIGHT, NAME OF VENDOR, AND GERMINATION. SEED MUST BE CERTIFIED AND MUST BE 98% PURE, LIVE SEED.
4. FOR ALL SLOPES 3:1 AND GREATER A MIXTURE OF ERAGROSTIS CURVULA (WEEPING LOVE GRASS) AND SRICEA LESPEDEZA (LESPEEDEZA) IS TO BE INSTALLED FROM MARCH 2 TO SEPTEMBER 14. FOR INSTALLATIONS BETWEEN SEPTEMBER 15 AND MARCH 1, LOLIUM MULTIFLORUM (ANNUAL RYE GRASS) IS TO BE APPLIED.
5. ANNUAL RYE GRASS IS CONSIDERED A TEMPORARY COVER ONLY. AS A PART OF THIS SCOPE OF WORK, CONTRACTOR RESPONSIBLE FOR REMOVAL OF TEMPORARY RYE GRASS AND ESTABLISHMENT OF PERMANENT SEED (VARIETIES SPECIFIED ABOVE) AT THE SOONEST POSSIBLE DATE.
6. IF AREAS ARE TO BE SODDED, SOD IS TO BE FREE OF WEEDS AND PLACED IN ACCORDANCE WITH SOD STANDARD DETAIL L-401 BETWEEN JANUARY 31 THRU JULY 31.

AREAS TO BE GRASSED IN FESCUE:

1. FOR INSTALLATIONS BETWEEN SEPTEMBER 15 AND MARCH 15 APPLY FESCUE SEED OR SOD.
2. SEED SHOULD BE DELIVERED TO SITE IN UNSEALED STANDARD SIZED CONTAINERS SHOWING WEIGHT, NAME OF VENDOR, AND GERMINATION. SEED MUST BE CERTIFIED AND MUST BE 98% PURE, LIVE SEED.
3. IF SOD IS USED, SOD SHOULD FREE OF WEEDS AND PLACED IN ACCORDANCE WITH SOD STANDARD DETAIL L-401 BETWEEN SEPTEMBER 15 AND NOVEMBER 15 OR MARCH 1 AND APRIL 15.

PLANTING SOIL MIX

40% NATIVE SOIL (CLAY, NO CLODS OVER 1" DIAMETER)
40% TOPSOIL (DARK, ORGANIC, SANDY CLAY LOAM)
10% COMPOSTED MANURE OR PEAT MOSS
10% RIVER SAND

PLANT SCHEDULE

TREES

SYMBOL	COMMON NAME	BOTANICAL NAME	NOTES	MIN SIZE	MIN HT	QTY	SPACING
	NELLIE STEVENS HOLLY	ILEX X 'NELLIE R STEVENS'	STRAIGHT LEADER, NO SPLIT LEADERS ACCEPTED, NO GIRDLING ROOTS, FREE OF DISEASE, INSECTS AND WEEDS, FULL TO THE GROUND		12 FT	12	MIN. 30' O.C. / AS SHOWN
	BLACK GUM	NYSSA SYLVATICA	STRAIGHT LEADER, NO SPLIT LEADERS ACCEPTED, NO GIRDLING ROOTS, FREE OF DISEASE, INSECTS AND WEEDS	2" CAL	8 FT	2	MIN. 35' O.C. / AS SHOWN
	AMERICAN FRINGE	CHIONANTHUS VIRGINIANA	STANDARD, NO GIRDLING ROOTS, FREE OF DISEASE, INSECTS AND WEEDS	2" CAL	8 FT	5	MIN. 15' O.C. / AS SHOWN
	GREEN CASTLE HOLLY	ILEX X WANDOENSIS 'OOSTANUALA'	STRAIGHT LEADER, NO SPLIT LEADERS ACCEPTED, NO GIRDLING ROOTS, FREE OF DISEASE, INSECTS AND WEEDS,FULL TO THE GROUND		8 FT	6	MIN. 3' O.C. / AS SHOWN
	TEDDY BEAR MAGNOLIA	MAGNOLIA GRANDIFOLIA 'TEDDY BEAR'	STRAIGHT LEADER, NO SPLIT LEADERS ACCEPTED, NO GIRDLING ROOTS, FREE OF DISEASE, INSECTS AND WEEDS, FULL TO THE GROUND	3" CAL	10 FT	6	MIN. 10' O.C. / AS SHOWN
	AVALYN LAUREL OAK	QUERCUS HEMISPHERICA 'AVALYN'	STRAIGHT LEADER, NO SPLIT LEADERS ACCEPTED, NO GIRDLING ROOTS, FREE OF DISEASE, INSECTS AND WEEDS	4" CAL	12 FT	7	MIN 7' O.C./AS SHOWN
	GREEN GIANT ARBORVITAE	THUJA PLICATA 'GREEN GIANT'	STRAIGHT LEADER, NO SPLIT LEADERS ACCEPTED, NO GIRDLING ROOTS, FREE OF DISEASE, INSECTS AND WEEDS, FULL TO THE GROUND		12 FT	5	MIN. 28' O.C. / AS SHOWN
	BRODIE EASTERN RED CEDAR	JUNIPERUS VIRGINIANA 'BRODIE'	STRAIGHT LEADER, NO SPLIT LEADERS ACCEPTED, NO GIRDLING ROOTS, FREE OF DISEASE, INSECTS AND WEEDS, FULL TO THE GROUND		10 FT	16	MIN 14' O.C./ AS SHOWN
					TOTAL:	59	TREES

SHRUBS/GRASSES

SYMBOL	COMMON NAME	BOTANICAL NAME	NOTES	SIZE	MIN HT	QTY	SPACING (OC)
	ADAGIO MAIDEN GRASS	MISCANTHUS SINENSIS 'ADAGIO'	FULL IN POT, FREE OF WEEDS, DISEASE AND INSECTS	3 GAL	18 IN.	1	MIN. 3' O.C. / AS SHOWN
	WHITE CLOUD MUHLY GRASS	MUHLENBERGIA SERICEA 'WHITE CLOUD'	FULL IN POT, FREE OF WEEDS, DISEASE AND INSECTS	1 GAL	18 IN.	26	MIN. 2.5' O.C. /AS SHOWN
	RED TWIG DOGWOOD	CORNUS SERICEA	FULL IN POT, FREE OF WEEDS, DISEASE AND INSECTS	3 GAL	18 IN.	5	MIN. 3' O.C. / AS SHOWN
	JEWEL BOX DISTYLIUM	DISTYLIUM 'BLDY01 PPIP'	FULL IN POT, FREE OF WEEDS, DISEASE AND INSECTS	3 GAL	12 IN.	21	MIN. 3' O.C. / AS SHOWN
	TOUCH OF GOLD HOLLY	ILEX CRENATA 'ADORNED'	FULL IN POT, FREE OF WEEDS, DISEASE AND INSECTS	3 GAL	12 IN.	8	MIN. 5' O.C./AS SHOWN
					TOTAL:	61	SHRUBS

PERENNIALS

SYMBOL	COMMON NAME	BOTANICAL NAME	NOTES	SIZE	MIN HT	QTY	SPACING (OC)
	CAT'S PAJAMAS CATMINT	NEPETA HYBRID 'CAT'S PAJAMAS'	FULL IN POT, FREE OF WEEDS, DISEASE AND INSECTS	1 GAL	6 IN.	41	MIN 24" O.C./AS SHOWN
	STELLA DE ORO DAYLILY	HEMEROCALLIS 'STELLA DE ORO'	FULL IN POT, FREE OF WEEDS, DISEASE AND INSECTS	1 GAL	18 IN.	42	MIN 3' O.C./AS SHOWN
					TOTAL:	83	PERENNIALS

GROUND COVERS

SYMBOL	COMMON NAME	BOTANICAL NAME	NOTES	QTY (SF)	SPACING
	PINESTRAW		CLEAN LONG NEEDLE PINESTRAW, FREE OF WEEDS, GRASS, STICKS, WOOD CHIPS OR PINECONES.	3500	3" LAYER IN 6' DIAMETER RINGS AROUND EACH TREE AND SURROUNDING ALL SHRUB PLANTINGS. PINESTRAW NOT TO BE PLACED WITHIN 6" OF TREE OR SHRUB LEADER.
	BERMUDA SOD 'TIFWAY 419'	CYNODON DACTYLON 'TIFWAY 419'	FREE OF WEEDS, DISEASE AND INSECTS.	34,000	SEE SOD STANDARD DETAIL ON SHEET L-401.

PRIME
A Stratus Team Company
3715 NORTHSIDE PARKWAY NW
BUILDING 300, SUITE 200
ATLANTA, GEORGIA 30327
4 0 4 - 4 2 5 - 7 1 0 0

PROJECT:
DALTON PICKLEBALL COMPLEX
904 CIVIC DR,
DALTON, GA 30721
PREPARED FOR:
CITY OF DALTON, GA

REVISIONS

NO.	DATE	DESCRIPTION

SEAL
GEORGIA REGISTERED PROFESSIONAL ENGINEER No. PE044235 KATHRYN D. STRICKLAND
DATE: 08/09/2024

© 2024 PRIME ENGINEERING, INC. Scales, as stated hereon, are valid on the original drawing; the dimensions of which are 24 by 36 inches. These scales, noted hereon, are hereby changed by the ratio of the overall sheet dimensions of the print to corresponding dimensions of the original drawing. This drawing is the property of PRIME ENGINEERING, INCORPORATED and is not to be reproduced or copied in whole or in part. It is only to be used for the project and site specifically identified herein and is not to be used on any other project. It is to be returned upon request.

DRAWING TITLE
LANDSCAPE NOTES & PLANT SCHEDULE

DRAWING DATE 08/09/2024	DRAWN BY CHM
DRAWING SCALE N.T.S.	DESIGNED BY CHM
PROJECT NUMBER 2024-0283	CHECKED BY KLK
DRAWING NUMBER L-001	

NOT ISSUED FOR CONSTRUCTION

LEGEND

CODE	PRACTICE	DETAIL	SYMBOL
	EROSION CONTROL FENCING	EC-401	P-Factor<0.030
TrA	TREE SAVE ORANGE FENCE "A"	L-102	
TrB	TREE SAVE HOG WIRE FENCE "B"	L-102	
TrC	TREE SAVE ORANGE FENCE "C"	L-102	
	LIMITS OF CONSTRUCTION/ DISTURBANCE		
	TREE TO BE REMOVED		X

1 L-101 **TREE PROTECTION PLAN**
SCALE:1" = 20'

GEORGIA 811 www.Georgia811.com
Know what's below. Call before you dig.

PRIME
A Stratus Team Company
5715 NORTHSIDE PARKWAY NW
BUILDING 300, SUITE 200
ATLANTA, GEORGIA 30327
404-425-7100

PROJECT:
DALTON PICKLEBALL COMPLEX
904 CIVIC DR,
DALTON, GA 30721

PREPARED FOR:
CITY OF DALTON, GA

REVISIONS

NO.	DATE	DESCRIPTION

SEAL

GEORGIA REGISTERED No. PE044235 PROFESSIONAL ENGINEER KATHRYN D. STREAM

DATE: 08/09/2024

© 2024 PRIME ENGINEERING, INC. Scales, as stated hereon, are valid on the original drawing; the dimensions of which are 24 by 36 inches. These scales, noted hereon, are hereby changed by the ratio of the overall sheet dimensions of the print to corresponding dimensions of the original drawing. This drawing is the property of PRIME ENGINEERING, INCORPORATED and is not to be reproduced or copied in whole or in part. It is only to be used for the project and site specifically identified herein and is not to be used on any other project. It is to be returned upon request.

DRAWING TITLE
TREE PROTECTION PLAN

DRAWING DATE	08/09/2024
DRAWN BY	CHM
DESIGNED BY	CHM
DRAWING SCALE	1" = 20'
CHECKED BY	KLK
PROJECT NUMBER	2024-0283
DRAWING NUMBER	L-101

NOT ISSUED FOR CONSTRUCTION

R:\A-Z\City of Dalton, GA\2024-0283 Dalton-Pickleball Complex\3 ENGINEERING\Drawings\L-101 - TREE PROTECTION PLAN - 2024-0283.dwg Thu, 08/08/24 10:58 AM

1 L-201 **LANDSCAPE PLAN**
SCALE:1" = 20'

ABBREVIATIONS & SYMBOLS

TREES

SYMBOL	COMMON NAME	BOTANICAL NAME
	NELLIE STEVENS HOLLY	ILEX X 'NELLIE R STEVENS'
	BLACK GUM	NYSSA SYLVATICA
	AMERICAN FRINGE	CHIONANTHUS VIRGINIANA
	GREEN CASTLE HOLLY	ILEX X WANDOENSIS 'OOSTANUALA'
	TEDDY BEAR MAGNOLIA	MAGNOLIA GRANDIFOLIA 'TEDDY BEAR'
	AVALYN LAUREL OAK	QUERCUS HEMISPHERICA 'AVALYN'
	GREEN GIANT ARBORVITAE	THUJA PLICATA 'GREEN GIANT'
	BRODIE EASTERN RED CEDAR	JUNIPERUS VIRGINIANA 'BRODIE'

SHRUBS/GRASSES

	ADAGIO MAIDEN GRASS	MISCANTHUS SINENSIS 'ADAGIO'
	WHITE CLOUD MUHLY GRASS	MUHLENBERGIA SERICEA 'WHITE CLOUD'
C	RED TWIG DOGWOOD	CORNUS SERICEA
	JEWEL BOX DISTYLIUM	DISTYLIUM 'BLDY01 PPIP'
	TOUCH OF GOLD HOLLY	ILEX CRENATA 'ADORNED'

GROUND COVERS/PERENNIALS

	CAT'S PAJAMAS CATMINT	NEPETA HYBRID 'CAT'S PAJAMAS'
	STELLA DE ORO DAYLILY	HEMEROCALLIS 'STELLA DE ORO'
	PINESTRAW	
	BERMUDA GRASS SOD	CYNODON DACTYLON

NOTES:

1. REFER TO SHEET L-001 FOR PLANT SCHEDULE AND ADDITIONAL TREE AND SHRUB LANDSCAPING NOTES.
2. REFER TO SHEETS LJ-201 & LJ-401 FOR HARDSCAPE & SITE FURNISHINGS.
3. REFER TO SHEET L-401 FOR PLANTING STANDARD DETAILS.
4. REFER TO IRRIGATION SHEETS LI-201 AND LI-401 FOR IRRIGATION PLANS AND DETAILS.

GEORGIA811 www.Georgia811.com Know what's below. Call before you dig.

PRIME A Stratus Team Company
3715 NORTHSIDE PARKWAY NW
BUILDING 300, SUITE 200
ATLANTA, GEORGIA 30327
404-425-7100

PROJECT:
DALTON PICKLEBALL COMPLEX
904 CIVIC DR,
DALTON, GA 30721

PREPARED FOR:
CITY OF DALTON, GA

REVISIONS

NO.	DATE	DESCRIPTION

SEAL

GEORGIA REGISTERED No. PE044235 PROFESSIONAL ENGINEER KATHRYN D. SMITHERMAN

DATE: 08/09/2024

© 2024 PRIME ENGINEERING, INC. Scales, as stated hereon, are valid on the original drawing; the dimensions of which are 24 by 36 inches. These scales, noted hereon, are hereby changed by the ratio of the overall sheet dimensions of the print to corresponding dimensions of the original drawing. This drawing is the property of PRIME ENGINEERING, INCORPORATED and is not to be reproduced or copied in whole or in part. It is only to be used for the project and site specifically identified herein and is not to be used on any other project. It is to be returned upon request.

DRAWING TITLE
LANDSCAPE PLAN

DRAWING DATE	08/09/2024
DRAWN BY	CHM
DESIGNED BY	CHM
DRAWING SCALE	1" = 20'
CHECKED BY	KLK
PROJECT NUMBER	2024-0283
DRAWING NUMBER	L-201

NOT ISSUED FOR CONSTRUCTION

R:\A-Z\City of Dalton, GA\2024-0283 Dalton-Pickleball Complex\3 ENGINEERING\Drawings\L-201 - LANDSCAPE PLAN - 2024-0283.dwg Thu, 08/08/24 10:59 AM

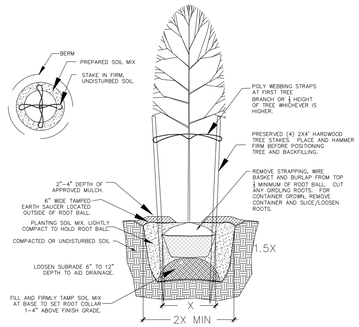

1 L-401 2" CALIPER OR LESS TREE PLANTING
SCALE:NTS

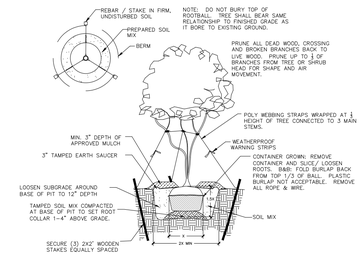

2 L-401 MULTI-STEM TREE PLANTING / STAKING
SCALE:NTS

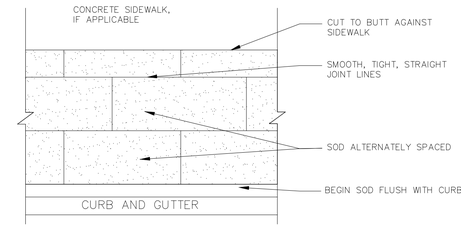

NOTE: SOD SHALL NOT HAVE GAPS OF GREATER THAN 1/4" AT JOINTS. SOD SHALL BE SMOOTHLY CUT TO FIT AROUND ALL EXISTING STRUCTURES.

3 L-401 SOD PLACEMENT
SCALE: NTS

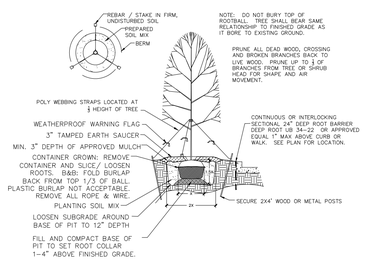

4 L-401 TREE PLANTING FOR 3" OR GREATER CALIPER
SCALE:NTS

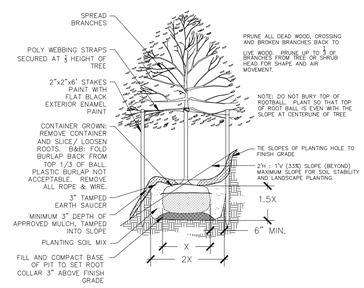

5 L-401 TREE PLANTING ON SLOPES
SCALE:NTS

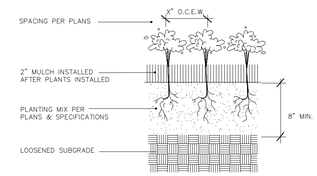

6 L-401 BARE ROOT SHRUB
SCALE:NTS

NOTE: PLANT SPACING SHOWN OR SPECIFIED ON PLANS IS TO REMAIN CONSISTENT THROUGHOUT SITE. PLANT QUANTITIES MUST BE ADJUSTED FOR SLOPES. CONTRACTOR IS RESPONSIBLE FOR KNOWING LOCATIONS, SIZE AND APPROXIMATE RISE TO RUN RATIO OF SITE SLOPES. CONTRACTOR ALSO RESPONSIBLE FOR PROVIDING ADEQUATE MATERIALS FOR SLOPES IN THE BID PRICE AND IN THE INSTALLATION.

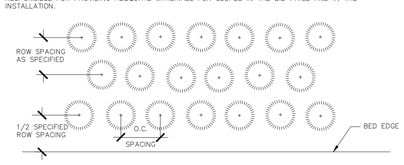

7 L-401 TRIANGULAR PLANT SPACING
SCALE:NTS

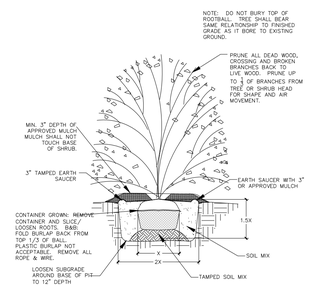

8 L-401 SHRUB PLANTING
SCALE:NTS

*NOTE: PLANTING SOIL MIX IS NOT TO COVER THE ROOTMASS OF B&B OR CONTAINER MATERIAL. CONTAINER SOIL MIX SHALL BE IN DIRECT CONTACT WITH MULCH.

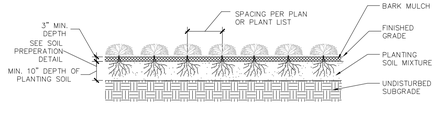

9 L-401 SHRUB OR GRONDCOVER BED
SCALE:NTS

PRIME
A Stratus Team Company
3715 NORTHSIDE PARKWAY NW
BUILDING 300, SUITE 200
ATLANTA, GEORGIA 30327
404-425-7100

PROJECT:
DALTON PICKLEBALL COMPLEX
904 CIVIC DR,
DALTON, GA 30721

PREPARED FOR:
CITY OF DALTON, GA

REVISIONS

NO.	DATE	DESCRIPTION

SEAL

GEORGIA REGISTERED No. PE044235 PROFESSIONAL ENGINEER KATHRYN M. KIRKPATRICK

DATE: 08/09/2024

© 2024 PRIME ENGINEERING, INC. Scales, as stated hereon, are valid on the original drawing; the dimensions of which are 24 by 36 inches. These scales, noted hereon, are hereby changed by the ratio of the overall sheet dimensions of the print to corresponding dimensions of the original drawing. This drawing is the property of PRIME ENGINEERING, INCORPORATED and is not to be reproduced or copied in whole or in part. It is only to be used for the project and site specifically identified herein and is not to be used on any other project. It is to be returned upon request.

DRAWING TITLE
LANDSCAPE DETAILS

DRAWN BY	CHM
DESIGNED BY	CHM
CHECKED BY	KLK
DRAWING DATE	08/09/2024
DRAWING SCALE	N.T.S.
PROJECT NUMBER	2024-0283
DRAWING NUMBER	L-401

NOT ISSUED FOR CONSTRUCTION

R:\A-Z\City of Dalton, GA\2024-0283 Dalton-Pickleball Complex\3 ENGINEERING\Drawings\L-401 - LANDSCAPE DETAILS - 2024-0283.dwg Thu, 08/08/24 10:59 AM

GENERAL IRRIGATION NOTES:

1. THIS DRAWING IS PROVIDED FOR DESIGN INTENT ONLY. THE CONTRACTOR SHALL SUBMIT A DESIGN DRAWING SHOWING: VALVES, LATERALS, MAINLINE, CONTROLLER AND SPRINKLER LOCATIONS AND TYPES, ETC.
2. COORDINATE METER AND VALVE SIZE AND INSTALLATION COST WITH CITY.
3. VERIFY LOCATION PRIOR TO BEGINNING WORK, COORDINATE WITH THE LANDSCAPE PLAN.
4. CONTRACTOR TO PROVIDE IRRIGATION CLOCK/CONTROLLER PER OWNER'S DIRECTIVE.
5. CONTRACTOR TO PROVIDE AND INSTALL SLEEVES TO CLOCK LOCATION.
6. CONTRACTOR TO PROVIDE POWER SOURCE FOR CLOCK.
7. CONTRACTOR TO PROVIDE AND INSTALL ALL SLEEVES.
8. CONTROL WIRES SHALL BE RUN INSIDE PIPE SLEEVES IN ALL PAVEMENT AREAS INCLUDING BACK TO CLOCK/CONTROLLER.
9. ALL CONSTRUCTION TO BE IN ACCORDANCE WITH ALL APPLICABLE CODES. NOTHING IN THESE DRAWINGS SHALL RELIEVE THE CONTRACTOR FROM COMPLYING WITH ALL APPROPRIATE SAFETY REGULATIONS.
10. SEE IRRIGATION DETAILS, DWG LI-401.
11. SPRINKLER SYSTEM CONTRACTOR SHALL TEST PRESSURE AND FLOW AT SITE. SPRINKLER ZONES SHALL BE SIZED ACCORDINGLY. ALL PRESSURE AND FLOW DATE TO BE PROVIDED.
12. IRRIGATION CONTRACTOR IS TO CONDUCT A MONTHLY INSPECTION OF ALL DRIP IRRIGATION CIRCUITS FOR THE FIRST 12 MONTHS TO ENSURE PLANTS ARE GETTING WATERED.
13. IRRIGATION CONTROLLER TO BE LOCATED IN THE FIRE/UTILITY ROOM OF BUILDING.
14. IRRIGATION TO INCLUDE A RAIN GAUGE WITH CONNECTIVITY TO THE IRRIGATION CONTROLLER.

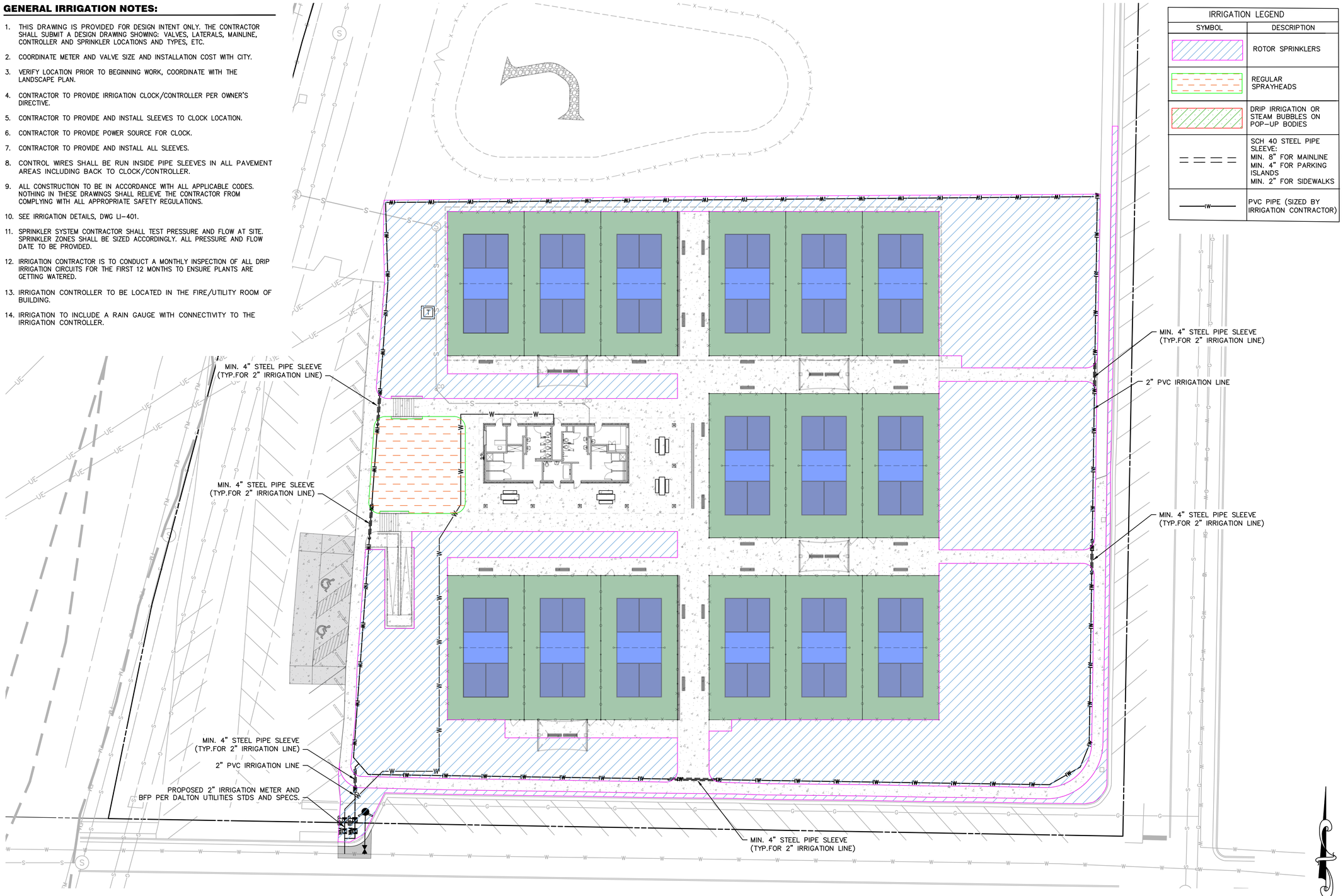

IRRIGATION LEGEND	
SYMBOL	DESCRIPTION
	ROTOR SPRINKLERS
	REGULAR SPRAYHEADS
	DRIP IRRIGATION OR STEAM BUBBLES ON POP-UP BODIES
	SCH 40 STEEL PIPE SLEEVE: MIN. 8" FOR MAINLINE MIN. 4" FOR PARKING ISLANDS MIN. 2" FOR SIDEWALKS
	PVC PIPE (SIZED BY IRRIGATION CONTRACTOR)

GEORGIA811 www.Georgia811.com Know what's below. Call before you dig.

1 LI-201 **IRRIGATION PLAN**
SCALE:1" = 20'

PRIME A Stratus Team Company
1715 NORTHSIDE DRIVE NW
BUILDING 100, SUITE 200
ATLANTA, GEORGIA 30327
404-425-7100

PROJECT:
DALTON PICKLEBALL COMPLEX
904 CIVIC DR, DALTON, GA 30721
PREPARED FOR:
CITY OF DALTON, GA

REVISIONS

NO.	DATE	DESCRIPTION

SEAL

GEORGIA REGISTERED No. PE044235 PROFESSIONAL ENGINEER KATHRYN D. KLIK

DATE: 08/09/2024

© 2024 PRIME ENGINEERING, INC. Scales, as stated hereon, are valid on the original drawing; the dimensions of which are 24 by 36 inches. These scales, noted hereon, are hereby changed by the ratio of the overall sheet dimensions of the print to corresponding dimensions of the original drawing. This drawing is the property of PRIME ENGINEERING, INCORPORATED and is not to be reproduced or copied in whole or in part. It is only to be used for the project and site specifically identified herein and is not to be used on any other project. It is to be returned upon request.

DRAWING TITLE
IRRIGATION PLAN

DRAWN BY SY	DESIGNED BY KDS	CHECKED BY KLK
DRAWING DATE 08/09/2024	DRAWING SCALE 1" = 20'	PROJECT NUMBER 2024-0283

DRAWING NUMBER **LI-201**

NOT ISSUED FOR CONSTRUCTION

R:\A-Z\City of Dalton, GA\2024-0283 Dalton-Pickleball Complex\3 ENGINEERING\Drawings\LI-201 - PROPOSED IRRIGATION PLAN - 2024-0283.dwg Thu, 08/08/24 10:59 AM

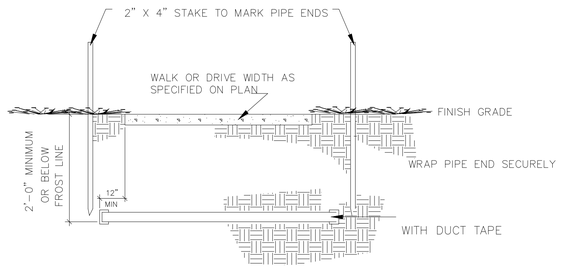

SCHEDULE 40 PVC PIPE
4" DIA. FOR LATERALS
4" DIA. FOR MAIN
6" DIA. FOR MAIN AND LATERALS

NOTE:
INSERT #4 REBAR SECTION OR OTHER METAL OBJECT INSIDE PIPE END PRIOR TO TAPING TO FACILITATE FUTURE FINDINGS OF SLEEVE WITH METAL DETECTOR. REMOVE REBAR PRIOR TO USING SLEEVE.

1 / LI-401 PIPE SLEEVE DETAIL
SCALE: NTS

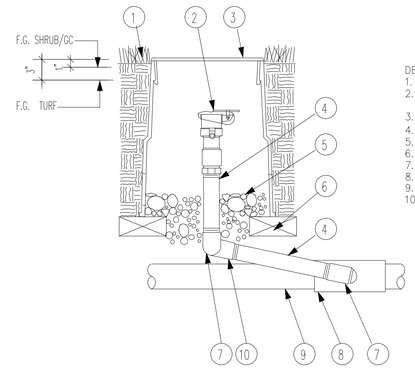

DETAIL NOTES:
1. Finish grade.
2. Quick- coupling valve: Rainbird model 33DLRC or equal.
3. Valve Box with cover
4. PVC SCH 80 nipple (Length as Required).
5. 4 inches min. of 3/8-inch washed pea gravel.
6. Brick (1 of 2).
7. PVC SCH 40 STREET ELL.
8. PVC SCH 40 TEE OR ELL
9. PVC lateral pipe.
10. PVC SCH 40 ELL.

NOTE:
FURNISH FITTINGS AND PIPING NOMINALLY SIZED IDENTICAL TO NOMINAL QUICK COUPLING VALVE INLET SIZE.

2 / LI-401 QUICK COUPLER
SCALE: NTS

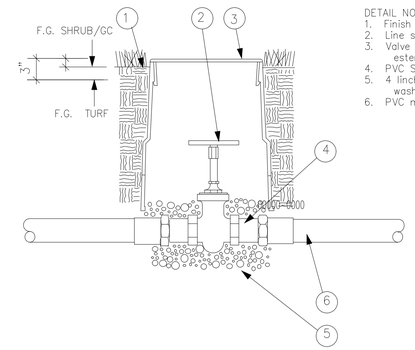

DETAIL NOTES:
1. Finish grade
2. Line size gate valve.
3. Valve box with cover: w/ estension - 9" DIA. size
4. PVC SCH 80 male adapter.
5. 4 linches min of 3/8-inch washed pea gravel
6. PVC mainline

3 / LI-401 GATE VALVE
SCALE: NTS

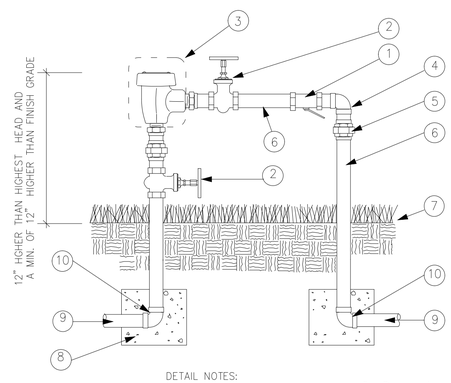

DETAIL NOTES:
1. Atmospheric vacuum breaker.
2. Brass gate valve.
3. "K"-Ttype copper wye strainer W/30 mesh screen with hose bib for flushing.
4. Copper 90° ELL.
5. Brass union.
6. Copper pipe - Typical.
7. Finish grade.
8. 1 CU. FT/ Conc. thrust block.
9. Irrigation mainline pipe.
10. SCH 80 PVC 90° ELL.

4 / LI-401 PRESSURE BACKFLOW PREVENTER
SCALE: NTS

IRRIGATION NOTES:

1. CONTRACTOR TO VERIFY ALL CONDITIONS AND DIMENSIONS SHOW ON THE PLANS AND SITE PRIOR TO COMMENCING WITH ANY WORK UNDER THIS CONTRACT.
2. PRIOR TO COMMENCEMENT OF WORK, THE CONTRACTOR SHALL CONTACT THE LANDSCAPE ARCHITECT AND COORDINATE ALL INSPECTIONS.
3. PLANS AS SHOWN ARE DIAGRAMMATIC ONLY. ALL IRRIGATION VALVES, MAINLINES, QUICK COUPLERS, HEADS, ETC., ARE TO BE PLACED IN PLANTING OR TURF AREAS. GATE VALVES AND REMOTE CONTROL VALVES SHALL BE PLACED IN SHRUB AREAS WHENEVER POSSIBLE.
4. EXTREME CARE SHALL BE EXERCISED IN EXCAVATING AND WORKING NEAR EXISTING UTILITIES. CONTRACTOR SHALL VERIFY THE LOCATION OF ALL EXISTING UTILITIES AND SHALL BE RESPONSIBLE FOR REPAIRING ANY DAMAGE AS PART OF THIS WORK.
5. THE CONTRACT SHALL AT ALL TIMES PROTECT HIS WORK FROM DAMAGE AND THEFT AND REPLACE ALL DAMAGED OR STOLEN PARTS AT HIS EXPENSE UNTIL RECEIPT OF A "CERTIFICATE OF SUBSTANTIAL COMPLETION".
6. THE IRRIGATION CONTRACTOR SHALL NOT WILLFULLY INSTALL THE SPRINKLER SYSTEM AS ILLUSTRATED ON THE DRAWINGS WHEN FIELD ANALYSIS REVEALS OBSTRUCTIONS, GRADE DIFFERENCES OR DIFFERENCES IN AREA DIMENSIONS THAT MIGHT NOT HAVE BEEN CONSIDERED IN THE ENGINEERING OF THE SYSTEM. SUCH OBSTRUCTIONS OR DIFFERENCES SHALL BE BROUGHT TO THE ATTENTION OF THE LANDSCAPE ARCHITECT OR AUTHORIZED OWNER'S REPRESENTATIVE IN A TIMELY MANNER. THE IRRIGATION CONTRACTOR SHALL ASSUME FULL RESPONSIBILITY FOR ANY COSTS RELATED TO REVISING OR ALTERING THE SYSTEM IN THE EVENT THAT SUCH NOTIFICATION IS NOT CARRIED OUT.
7. REFER TO THE SPECIFICATIONS FOR ADDITIONAL SYSTEM, PRODUCT AND INSTALLATION INFORMATION AND REQUIREMENTS.
8. USE GLUE JOINTS IN THE MAINLINE PASSING THROUGH THE SLEEVES UNDER PAVEMENT.
9. CONTRACTOR SHALL FLUSH AND ADJUST THE SYSTEM FOR OPTIMUM PERFORMANCE. THIS SHALL INCLUDE RECALCULATING THE PRESSURE AT THE PRESSURE REGULATING VALVES TO OBTAIN OPTIMUM PRESSURE AS NEEDED
10. CONTRACTOR SHALL CONSULT WITH THE LANDSCAPE ARCHITECT ON THE LOCATION OF THE BACKFLOW PREVENTER AND IRRIGATION CONTROLLER PRIOR TO INSTALLATION IF NOT PROVIDED ON DRAWINGS.
11. ALL EQUIPMENT SHALL CONFORM TO APPLICABLE STATE, CITY AND COUNTY IRRIGATION AND PLUMBING CODES.

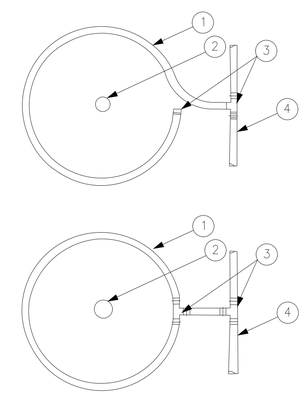

LEGEND

1. DRIPLINE PER PLAN
2. TREE PER LANDSCAPE PLAN
3. PLD OR PLD-LOC FITTING TYP.
4. BLANK DRIPLINE

NOTES:
1. AIR RELIEF VALVE (PLD-AVR) INSTALLED IN VALVE BOX AT OPTIMAL HIGHEST POINT FROM CONTROL ZONE KIT. MULTIPLE AIR RELIEF VALVES MAYBE NEEDED TO ACCOMMODATE DIFFERENCES IN GRADE.
2. ECO-INDICATOR TO BE INSTALLED AT OPTIMAL FURTHEST POINT FROM CONTROL ZONE KIT IN CLEAR VIEW WHEN POPPED UP.
3. FLUSH POINT TO BE INSTALLED AT OPTIMAL FURTHEST POINT FROM CONTROL ZONE KIT TO ALLOW FOR MAXIMUM DEBRIS FLUSH IN SYSTEM.

5 / LI-401 DRIPLINE TREE RING
SCALE: NTS

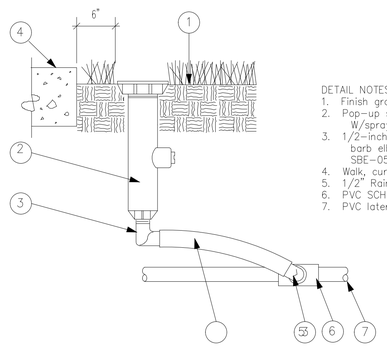

DETAIL NOTES:
1. Finish grade/Top of mulch.
2. Pop-up spray body: Rainbird 1812 W/spray head(see legend)
3. 1/2-inch male NPT x .490 inch barb elbow: Rainbird model SBE-050 or equal.
4. Walk, curb, wall, etc.,
5. 1/2" Rainbird Flex-pipe or equal.
6. PVC SCH 40 TEE (ELL).
7. PVC lateral pipe.

6 / LI-401 POP-UP SPRAY HEAD
SCALE: NTS

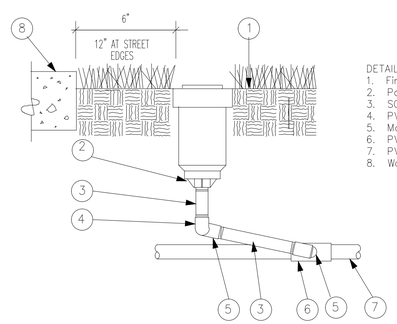

DETAIL NOTES:
1. Finish grade/Top of mulch.
2. Pop-up stream rotor.
3. SCH 40 PVC pipe
4. PVC SCH 40 street ELL
5. Marlex street ELL
6. PVC SCH 40 TEE (ELL)
7. PVC lateral pipe.
8. Walk, curb, wall, etc.,

7 / LI-401 TURF ROTOR
SCALE: NTS

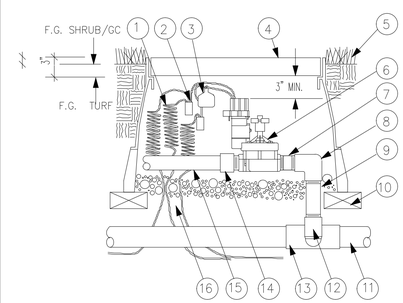

DETAIL NOTES:
1. 30-inch linear length of wire coiled(±10 wraps around a 2" PVC pipe)
2. Water proof epoxy connection(1 of 2)
3. ID tag
4. Valve box with cover - Approx. 10" X 14" X 15" deep
5. Finish grade/top of mulch or turf.
6. Remote control valve - Rainbird PEB-PRS
7. PVC SCH 80 NIPPLE (close)
8. PVC SCH 40 ELL
9. PVC SCH 80 nipple (Length As Required)
10. BRICK (1 OF 4 @ each corner)
11. PVC mainline pipe
12. SCH 80 nipple (2-inch length, hidden) and SCH 40 ELL
13. PVC SCH 40 TEE or ELL
14. PVC SCH 40 male adapter
15. PVC lateral pipe
16. 4 inches min. of 3/8-inch washed pea gravel.

8 / LI-401 REMOTE CONTROL VALVE
SCALE: NTS

PRIME
A Stratus Team Company
3715 NORTHSIDE PARKWAY NW
BUILDING 300, SUITE 200
ATLANTA, GEORGIA 30327
404-425-7100

PROJECT:
DALTON PICKLEBALL COMPLEX
904 CIVIC DR,
DALTON, GA 30721

PREPARED FOR:
CITY OF DALTON, GA

REVISIONS

NO.	DATE	DESCRIPTION

SEAL

GEORGIA REGISTERED PROFESSIONAL ENGINEER No. PE044235 KATHRYN D. SHEPHERD

DATE: 08/09/2024

© 2024 PRIME ENGINEERING, INC. Scales, as stated hereon, are valid on the original drawing; the dimensions of which are 24 by 36 inches. These scales, noted hereon, are hereby changed by the ratio of the overall sheet dimensions of the print to corresponding dimensions of the original drawing. This drawing is the property of PRIME ENGINEERING, INCORPORATED and is not to be reproduced or copied in whole or in part. It is only to be used for the project and site specifically identified herein and is not to be used on any other project. It is to be returned upon request.

DRAWING TITLE
IRRIGATION DETAILS

DRAWN BY	CHM
DESIGNED BY	CHM
CHECKED BY	KLK
DRAWING DATE	08/09/2024
DRAWING SCALE	N.T.S.
PROJECT NUMBER	2024-0283
DRAWING NUMBER	LI-401

NOT ISSUED FOR CONSTRUCTION

R:\A-Z\City of Dalton, GA\2024-0283 Dalton-Pickleball Complex\3 ENGINEERING\Drawings\LI-401 - PROPOSED IRRIGATION DETAILS - 2024-0283.dwg Thu, 08/08/24 10:59 AM

1 LJ-201 **HARDSCAPE PLAN**
SCALE:1" = 20'

GEORGIA811
www.Georgia811.com
Know what's below. Call before you dig.

R:\A-Z\City of Dalton, GA\2024-0283 Dalton-Pickleball Complex\3 ENGINEERING\Drawings\LJ-201 - HARDSCAPE PLAN - 2024-0283.dwg Thu, 08/08/24 11:00 AM

PRIME
A Stratus Team Company
5715 NORTHSIDE PARKWAY NW
BUILDING 300, SUITE 200
ATLANTA, GEORGIA 30327
404-425-7100

PROJECT:
DALTON PICKLEBALL COMPLEX
904 CIVIC DR,
DALTON, GA 30721

PREPARED FOR:
CITY OF DALTON, GA

REVISIONS

NO.	DATE	DESCRIPTION

SEAL

GEORGIA REGISTERED PROFESSIONAL ENGINEER No. PE044235 KATHRYN D. SHEPPARD

DATE: 08/09/2024

© 2024 PRIME ENGINEERING, INC. Scales, as stated hereon, are valid on the original drawing; the dimensions of which are 24 by 36 inches. These scales, noted hereon, are hereby changed by the ratio of the overall sheet dimensions of the print to corresponding dimensions of the original drawing. This drawing is the property of PRIME ENGINEERING, INCORPORATED and is not to be reproduced or copied in whole or in part. It is only to be used for the project and site specifically identified herein and is not to be used on any other projects. It is to be returned upon request.

DRAWING TITLE
HARDSCAPE PLAN

DRAWING DATE	08/09/2024
DRAWING SCALE	1" = 20'
PROJECT NUMBER	2024-0283
DRAWING NUMBER	LJ-201
DRAWN BY	CHM
DESIGNED BY	CHM
CHECKED BY	KLK

NOT ISSUED FOR CONSTRUCTION

TRASH CAN:
MODEL NO.: EX-32
COLOR: BLACK
SIZE: 32 GALLON
QTY: 6
LID: FLAT TOP
LID MODEL NO.: FTR-32-14
LID COLOR: BLACK
SIZE: 14" OPENING
QTY: 8

BELSON OUTDOORS TRASH BINS TO BE USED AT ALL BIN LOCATIONS UNLESS OTHERWISE SPECIFIED ON PLANS. FINAL FIELD LOCATIONS TO BE FIELD VERIFIED DURING CONSTRUCTION.

1 TRASH BIN DETAIL
LJ-401 SCALE: NTS

BACKLESS BENCH:
MODEL NO.: 942SM-V6
SIZE: 6 FEET
COLOR: BLACK
QTY: 31

BELSON OUTDOORS BENCH TO BE USED AT ALL BENCH LOCATIONS UNLESS OTHERWISE SPECIFIED ON PLANS. FINAL FIELD LOCATIONS TO BE FIELD VERIFIED DURING CONSTRUCTION.

2 BENCH DETAIL
LJ-401 SCALE: NTS

STANDARD PICNIC TABLE:
MODEL NO.: 238-VR8
COLOR: BLACK
SIZE: 8 FT
QTY: 2

ADA PICNIC TABLE:
MODEL NO.: 238H-VR8
COLOR: BLACK
SIZE: 8 FT
QTY: 2

BELSON OUTDOOR TABLES TO BE USED AT ALL TABLE LOCATIONS UNLESS OTHERWISE SPECIFIED ON PLANS. FINAL FIELD LOCATIONS TO BE FIELD VERIFIED DURING CONSTRUCTION.

3 PICNIC TABLE DETAIL
LJ-401 SCALE: NTS

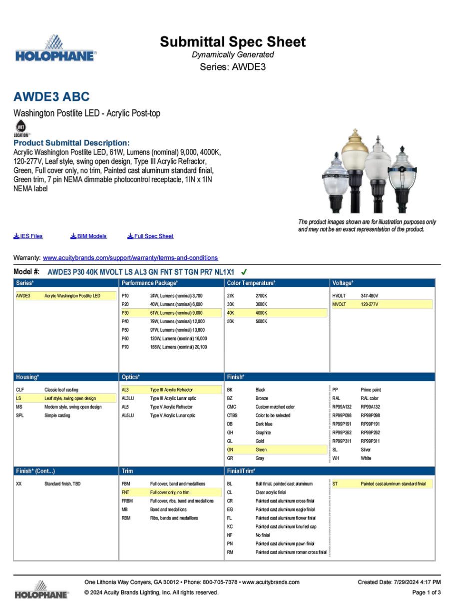

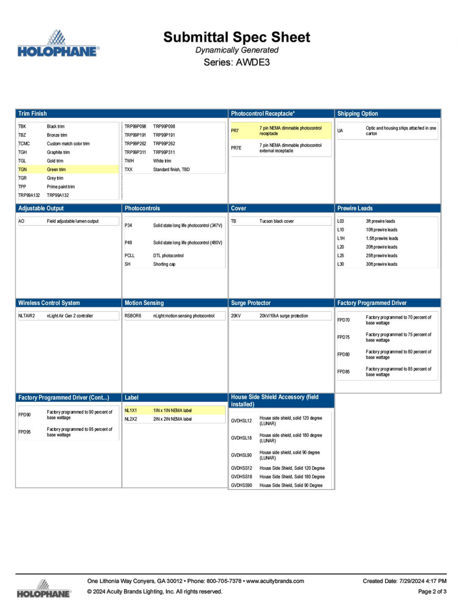

PEDESTRIAN STREET LAMP
HOLOPHANE MODEL NO: AWDE3
COLOR: GREEN
QTY: 18

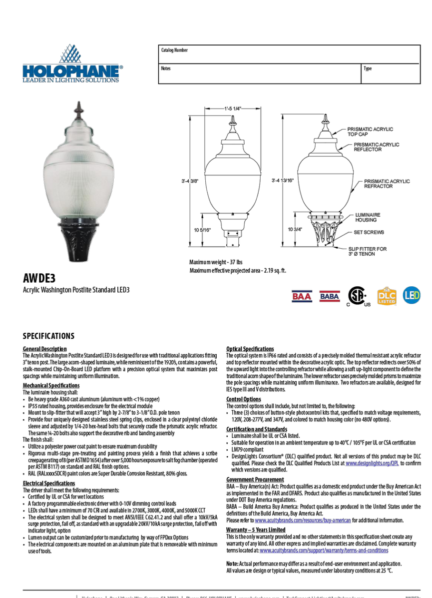

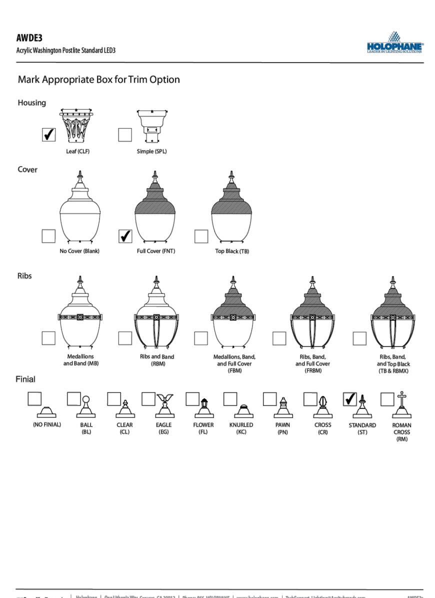

4 PEDESTRIAN LIGHT DETAIL
LJ-401 SCALE: NTS

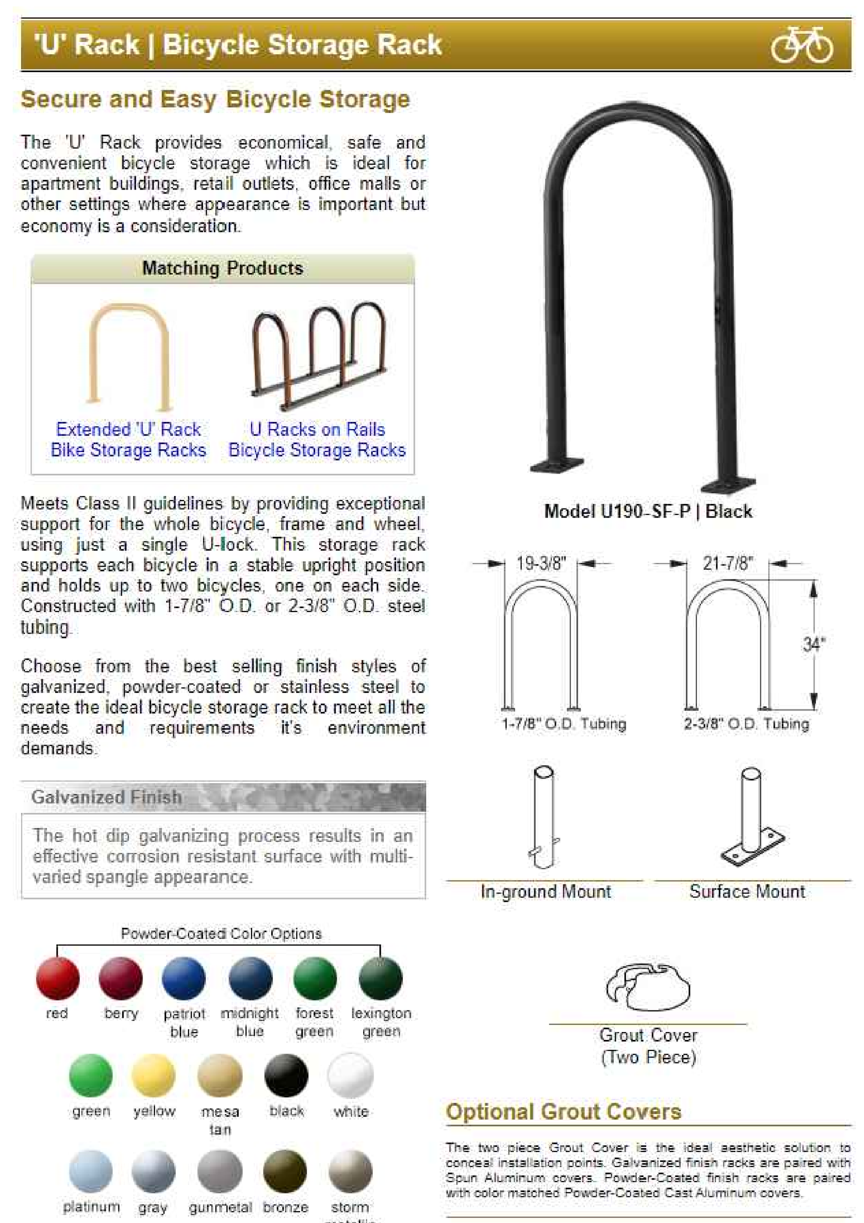

BIKE RACK:
MODEL NO.: U238-SF-P
TUBING SIZE: 2 3/8"
RACK SIZE: 21 7/8" X 34"
MOUNT TYPE: SURFACE
COLOR: BLACK
QTY: 6

BELSON OUTDOORS BIKE RACKS TO BE USED AT ALL BIKE RACK LOCATIONS UNLESS OTHERWISE SPECIFIED ON PLANS. FINAL FIELD LOCATIONS TO BE FIELD VERIFIED DURING CONSTRUCTION.

2 BIKE RACK DETAIL
LJ-401 SCALE: NTS

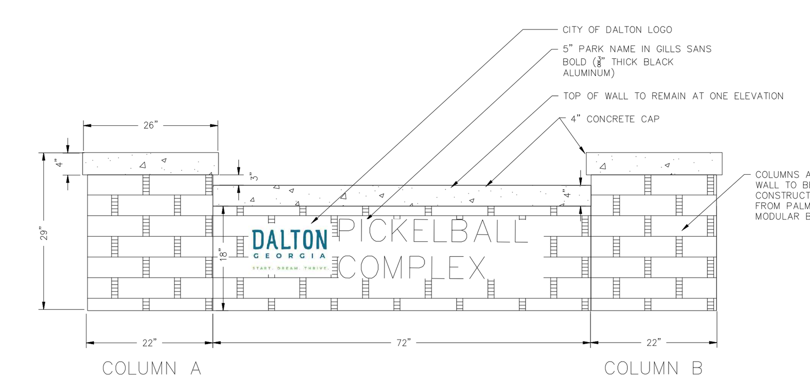

ELEVATION VIEW - CITY OF DALTON PICKLEBALL COMPLEX SIGN

NOTES:
MATERIALS FOR SIGNAGE:
PALMETTO BRICK – MODULAR RED WIRE CUT
MORTAR COLOR – HOLCIM FROSTY
4" CONCRETE CAP

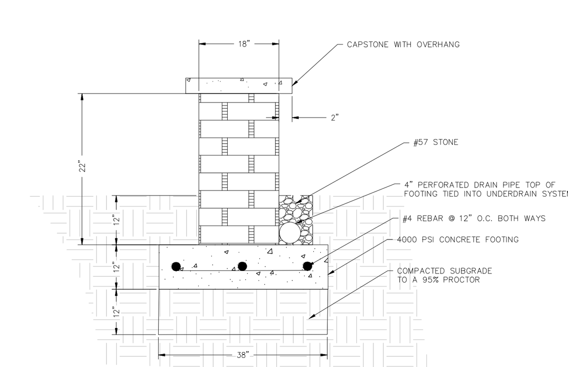

WALL SIDE VIEW - CITY OF DALTON PICKLEBALL COMPLEX SIGN

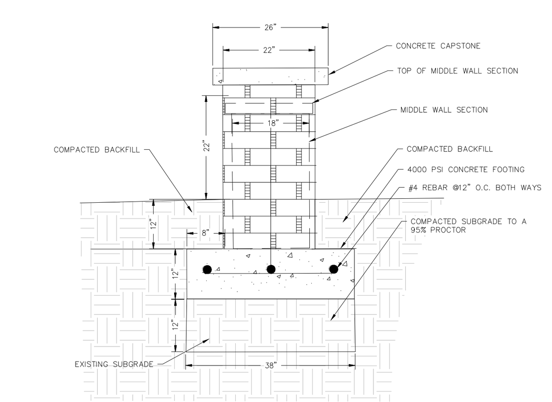

COLUMN SIDE VIEW - CITY OF DALTON PICKLEBALL COMPLEX SIGN

6 MONUMENT SIGN
LJ-401 SCALE: NTS

PRIME
A Stratus Team Company
3715 NORTHSIDE PARKWAY NW
BUILDING 300, SUITE 200
ATLANTA, GEORGIA 30327
404-425-7100

PROJECT:
DALTON PICKLEBALL COMPLEX
904 CIVIC DR, DALTON, GA 30721

PREPARED FOR:
CITY OF DALTON, GA

REVISIONS		
NO.	DATE	DESCRIPTION

SEAL
GEORGIA REGISTERED PROFESSIONAL ENGINEER No. PE044235 KATHRYN D. STRICKLAND
DATE: 08/09/2024

© 2024 PRIME ENGINEERING, INC. Scales, as stated hereon, are valid on the original drawing; the dimensions of which are 24 by 36 inches. These scales, noted hereon, are hereby changed by the ratio of the overall sheet dimensions of the print to corresponding dimensions of the original drawing. This drawing is the property of PRIME ENGINEERING, INCORPORATED and is not to be reproduced or copied in whole or in part. It is only to be used for the project and site specifically identified herein and is not to be used on any other project. It is to be returned upon request.

DRAWING TITLE
HARDSCAPE DETAILS

DRAWING DATE	DRAWN BY
08/09/2024	SY
DRAWING SCALE	DESIGNED BY
1"=30'	KDS
PROJECT NUMBER	CHECKED BY
2024-0283	KLK

DRAWING NUMBER
LJ-401

NOT ISSUED FOR CONSTRUCTION

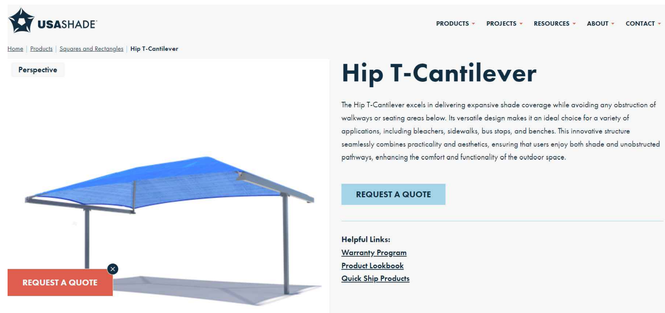

SHADE CANOPY
MODEL: HIP-T CANTILEVER
MODEL NO.:
MANUFACTURER: USA-SHADE (WWW.USA-SHADE.COM)
DIMENSIONS:
STRUCTURE COLOR: TO BE DECIDED CITY OF DALTON
SHADE FABRIC TYPE: TO BE DECIDED BY CITY OF DALTON
SHADE COLOR: TO BE DECIDED BY CITY OF DALTON
QTY: 4

1 LJ-402 SHADE CANOPY
SCALE: NTS

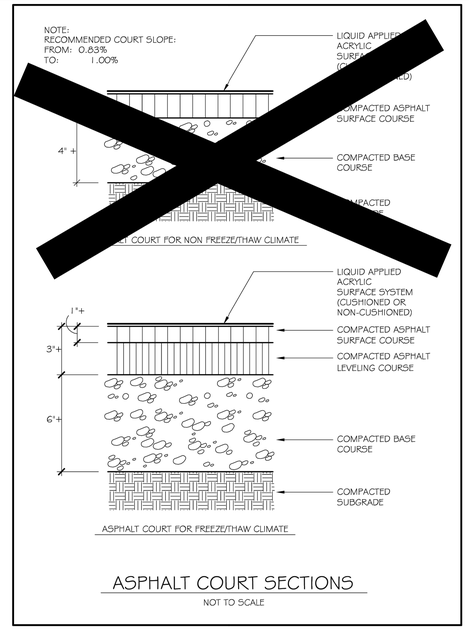

12ASPH.AVL.20

2 LJ-402 ASPHALT COURT SECTION
SCALE: NTS

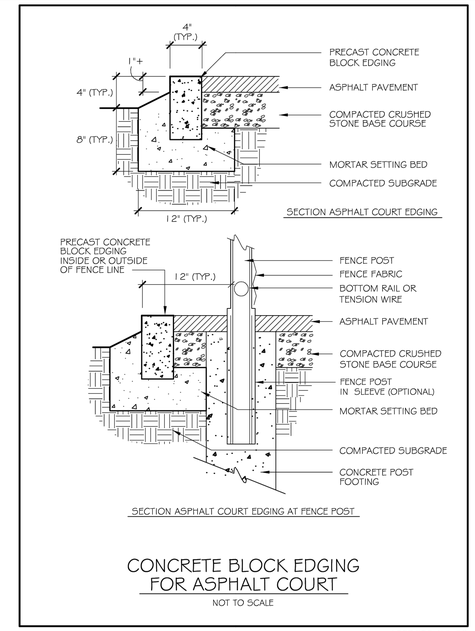

15EDGE2.AVL.20

3 LJ-402 CONCRETE BLOCK EDGING
SCALE: NTS

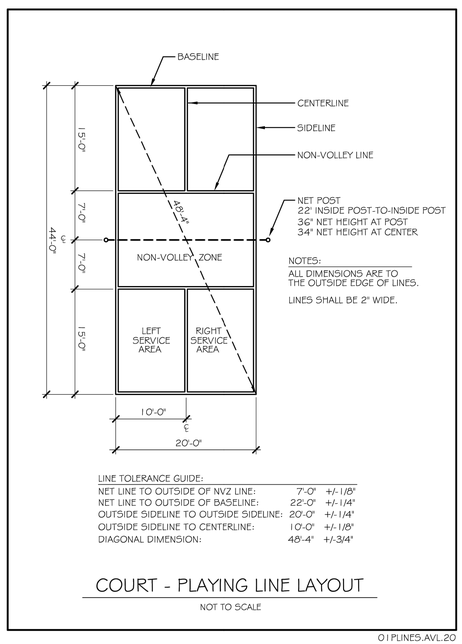

01PLINES.AVL.20

4 LJ-402 COURT - PLAYING LINE LAYOUT
SCALE: NTS

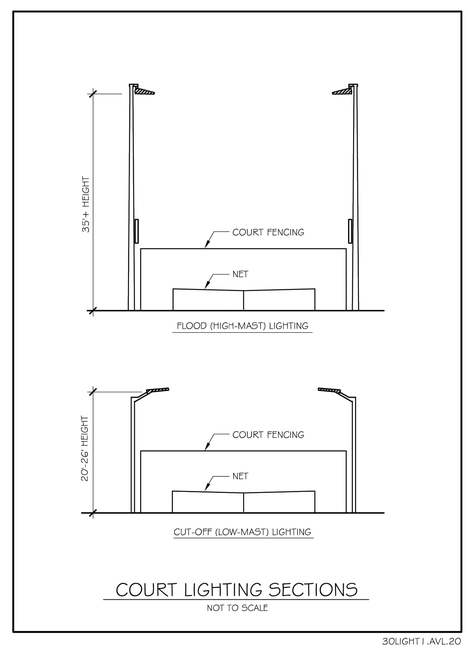

30LIGHT1.AVL.20

5 LJ-402 COURT LIGHTING SECTIONS
SCALE: NTS

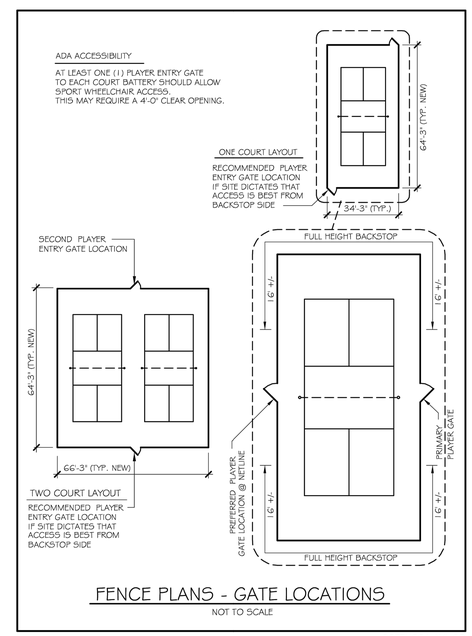

22FENCGA.AVL.20

6 LJ-402 FENCE PLANS - GATE LOCATIONS
SCALE: NTS

PRIME
A Stratus Team Company
5715 NORTHSIDE PARKWAY NW
BUILDING 300, SUITE 200
ATLANTA, GEORGIA 30327
404-425-7100

PROJECT:
DALTON PICKLEBALL COMPLEX
904 CIVIC DR,
DALTON, GA 30721
PREPARED FOR:
CITY OF DALTON, GA

REVISIONS

NO.	DATE	DESCRIPTION

SEAL
GEORGIA REGISTERED No. PE044235 PROFESSIONAL ENGINEER KATHRYN D. SHEPHERD
DATE: 08/09/2024

© 2024 PRIME ENGINEERING, INC.
Scales, as stated hereon, are valid on the original drawing; the dimensions of which are 24 by 36 inches. These scales, noted hereon, are hereby changed by the ratio of the overall sheet dimensions of the print to corresponding dimensions of the original drawing. This drawing is the property of PRIME ENGINEERING, INCORPORATED and is not to be reproduced or copied in whole or in part. It is only to be used for the project and site specifically identified herein and is not to be used on any other project. It is to be returned upon request.

DRAWING TITLE
HARDSCAPE & PICKLEBALL COURT DETAILS

DRAWN BY SY	DESIGNED BY KDS	CHECKED BY KLK	
DRAWING DATE 08/09/2024	DRAWING SCALE 1"=30'	PROJECT NUMBER 2024-0283	DRAWING NUMBER LJ-402

NOT ISSUED FOR CONSTRUCTION

R:\A-Z\City of Dalton, GA\2024-0283 Dalton-Pickleball Complex\3 ENGINEERING\Drawings\LJ-401 - HARDSCAPE DETAILS - 2024-0283.dwg Thu, 08/08/24 11:00 AM

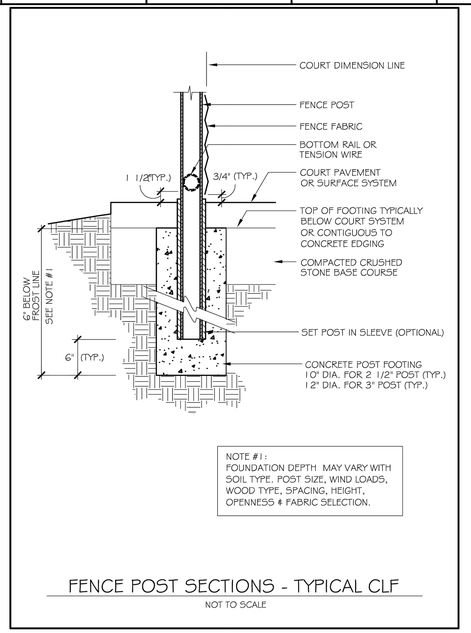

1 LJ-403 FENCE POST SECTIONS
SCALE: NTS

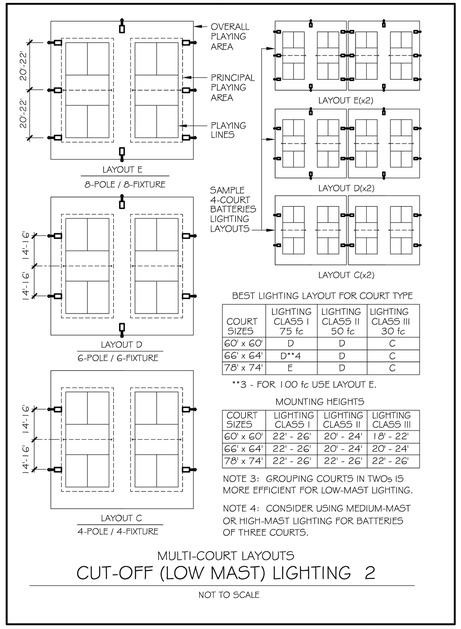

COURT SIZES	LIGHTING CLASS I 75 fc	LIGHTING CLASS II 50 fc	LIGHTING CLASS III 30 fc
60' x 60'	D	D	C
66' x 64'	D**4	D	C
78' x 74'	E	D	C

**3 - FOR 100 fc USE LAYOUT E.

COURT SIZES	LIGHTING CLASS I	LIGHTING CLASS II	LIGHTING CLASS III
60' x 60'	22' - 26'	20' - 24'	18' - 22'
66' x 64'	22' - 26'	20' - 24'	20' - 24'
78' x 74'	22' - 26'	22' - 26'	22' - 26'

2 LJ-403 MULTI-COURT LAYOUTS CUT-OFF (LOW MAST) LIGHTING 2
SCALE: NTS

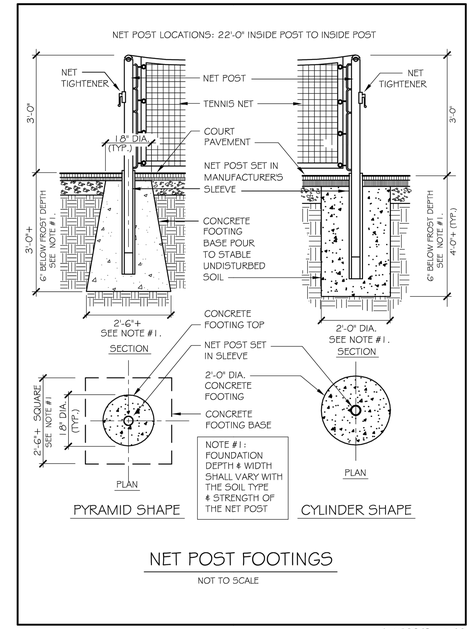

3 LJ-403 NET POST FOOTINGS
SCALE: NTS

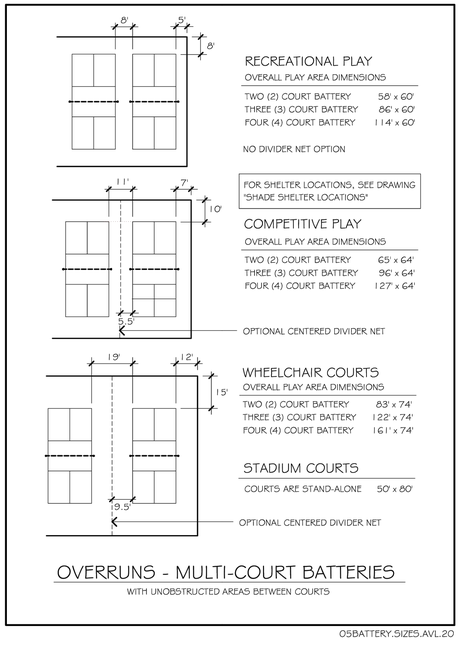

4 LJ-403 OVERRUNS - MULTI-COURT BATTERIES
SCALE: NTS

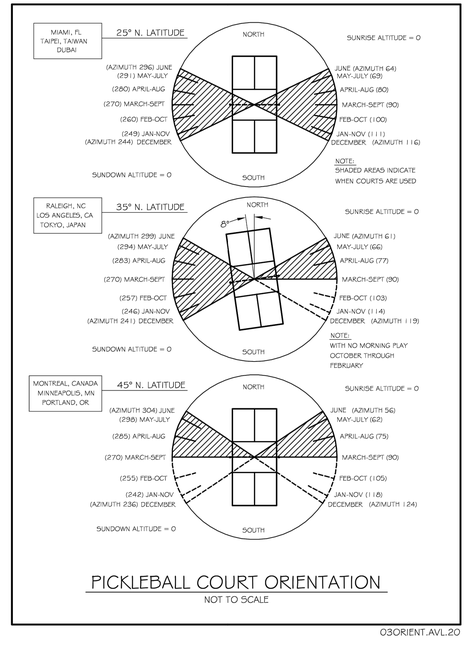

5 LJ-403 PICKLEBALL COURT ORIENTATION
SCALE: NTS

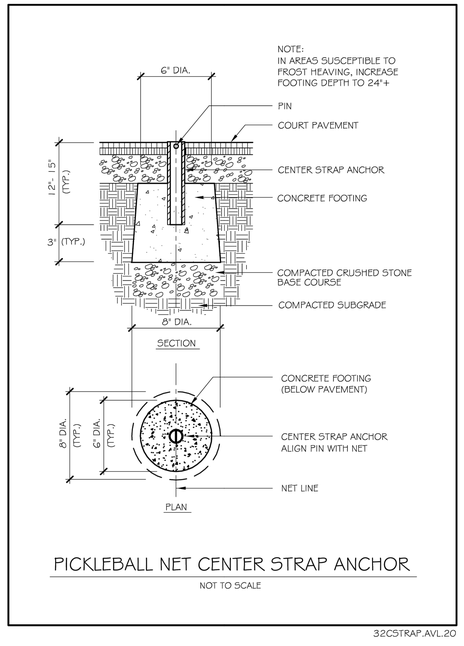

6 LJ-403 PICKLEBALL NET CENTER STRAP ANCHOR
SCALE: NTS

PRIME
A Stratus Team Company
3715 NORTHSIDE PARKWAY NW
BUILDING 300, SUITE 200
ATLANTA, GEORGIA 30327
404-425-7100

PROJECT:
DALTON PICKLEBALL COMPLEX
904 CIVIC DR,
DALTON, GA 30721

PREPARED FOR:
CITY OF DALTON, GA

REVISIONS

NO.	DATE	DESCRIPTION

SEAL

GEORGIA REGISTERED No. PE044235 PROFESSIONAL ENGINEER KATHRYN D. SHERMAN

DATE: 08/09/2024

© 2024 PRIME ENGINEERING, INC. Scales, as stated hereon, are valid on the original drawing; the dimensions of which are 24 by 36 inches. These scales, noted hereon, are hereby changed by the ratio of the overall sheet dimensions of the print to corresponding dimensions of the original drawing. This drawing is the property of PRIME ENGINEERING, INCORPORATED and is not to be reproduced or copied in whole or in part. It is only to be used for the project and site specifically identified herein and is not to be used on any other project. It is to be returned upon request.

DRAWING TITLE
PICKLEBALL COURT DETAILS

DRAWN BY SY	DESIGNED BY KDS	CHECKED BY KLK
DRAWING DATE 08/09/2024	DRAWING SCALE 1"=30'	PROJECT NUMBER 2024-0283

DRAWING NUMBER
LJ-403

NOT ISSUED FOR CONSTRUCTION

R:\A-Z\City of Dalton, GA\2024-0283 Dalton-Pickleball Complex\3 ENGINEERING\Drawings\LJ-401 - HARDSCAPE DETAILS - 2024-0283.dwg Thu, 08/08/24 11:00 AM

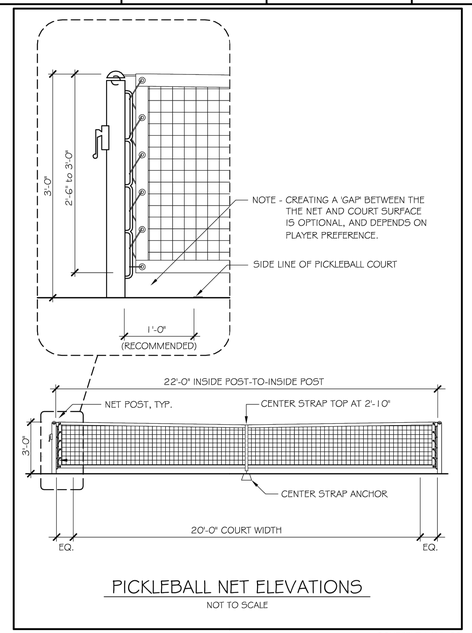

PICKLEBALL NET ELEVATIONS

NOT TO SCALE

02NETELEV.AVL.20

1 LJ-404 PICKLE BALL NET ELEVATIONS
SCALE: NTS

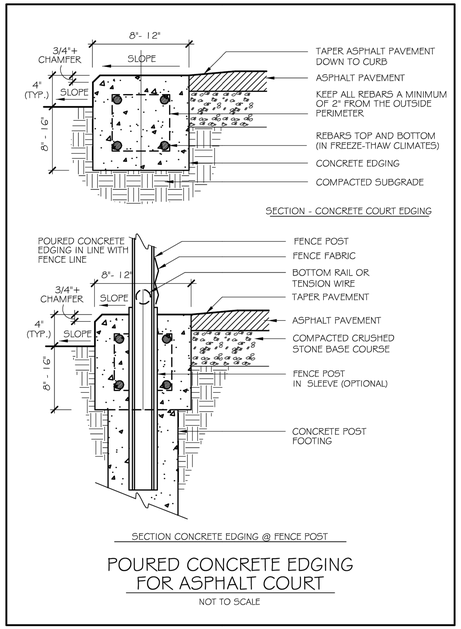

POURED CONCRETE EDGING FOR ASPHALT COURT

NOT TO SCALE

1GEDGE3.AVL.20

2 LJ-404 POURED CONCRETE EDGING FOR ASPHALT COURT
SCALE: NTS

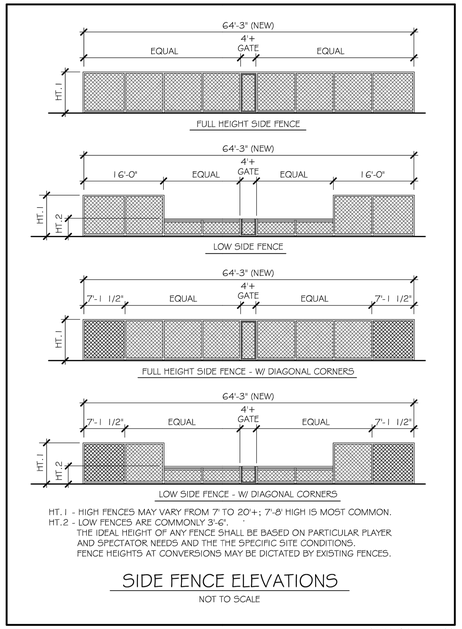

HT. 1 - HIGH FENCES MAY VARY FROM 7' TO 20'+; 7'-8' HIGH IS MOST COMMON.
HT. 2 - LOW FENCES ARE COMMONLY 3'-6'.
THE IDEAL HEIGHT OF ANY FENCE SHALL BE BASED ON PARTICULAR PLAYER AND SPECTATOR NEEDS AND THE THE SPECIFIC SITE CONDITIONS.
FENCE HEIGHTS AT CONVERSIONS MAY BE DICTATED BY EXISTING FENCES.

SIDE FENCE ELEVATIONS

NOT TO SCALE

25FENCELV.AVL.20

3 LJ-404 SIDE FENCE ELEVATIONS
SCALE: NTS

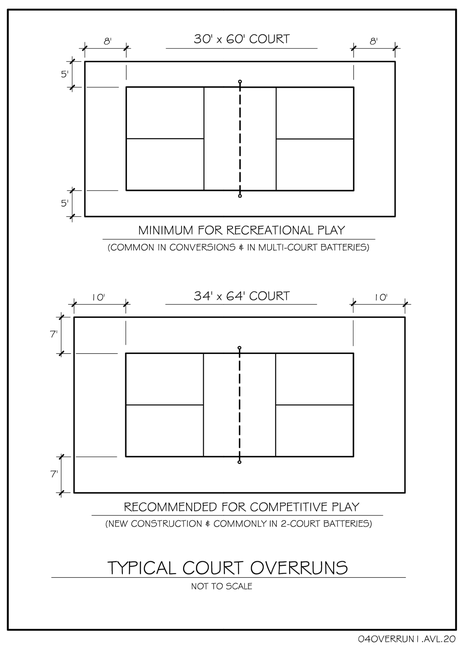

TYPICAL COURT OVERRUNS

NOT TO SCALE

04OVERRUN1.AVL.20

4 LJ-404 TYPICAL COURT OVERRUNS
SCALE: NTS

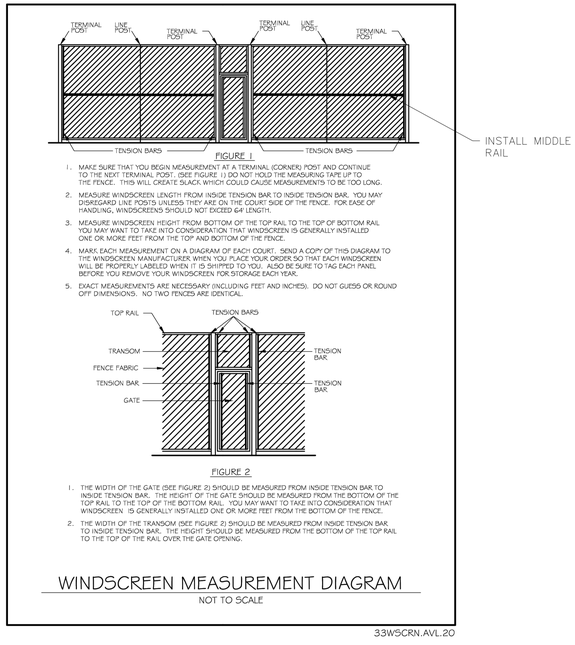

WINDSCREEN MEASUREMENT DIAGRAM

NOT TO SCALE

33WSCRN.AVL.20

4 LJ-404 WINDSCREEN MEASUREMENT DIAGRAM
SCALE: NTS

PRIME
A Stratus Team Company
5715 NORTHSIDE PARKWAY NW
BUILDING 300, SUITE 200
ATLANTA, GEORGIA 30327
404-425-7100

PROJECT:
DALTON PICKLEBALL COMPLEX
904 CIVIC DR,
DALTON, GA 30721

PREPARED FOR:
CITY OF DALTON, GA

REVISIONS

NO.	DATE	DESCRIPTION

SEAL

GEORGIA REGISTERED No. PE044235 PROFESSIONAL ENGINEER KATHRYN D. SHERMAN

DATE: 08/09/2024

© 2024 PRIME ENGINEERING, INC. Scales, as stated hereon, are valid on the original drawing; the dimensions of which are 24 by 36 inches. These scales, noted hereon, are hereby changed by the ratio of the overall sheet dimensions of the print to corresponding dimensions of the original drawing. This drawing is the property of PRIME ENGINEERING, INCORPORATED and is not to be reproduced or copied in whole or in part. It is only to be used for the project and site specifically identified herein and is not to be used on any other project. It is to be returned upon request.

DRAWING TITLE
PICKLEBALL COURT DETAILS

DRAWN BY	SY
DESIGNED BY	KDS
CHECKED BY	KLK
DRAWING DATE	08/09/2024
DRAWING SCALE	1"=30'
PROJECT NUMBER	2024-0283
DRAWING NUMBER	LJ-404

NOT ISSUED FOR CONSTRUCTION

R:\A-2\City of Dalton, GA\2024-0283 Dalton-Pickleball Complex\3 ENGINEERING\Drawings\LJ-401 - HARDSCAPE DETAILS - 2024-0283.dwg Thu, 08/08/24 11:00 AM

DRAWING CONVENTIONS

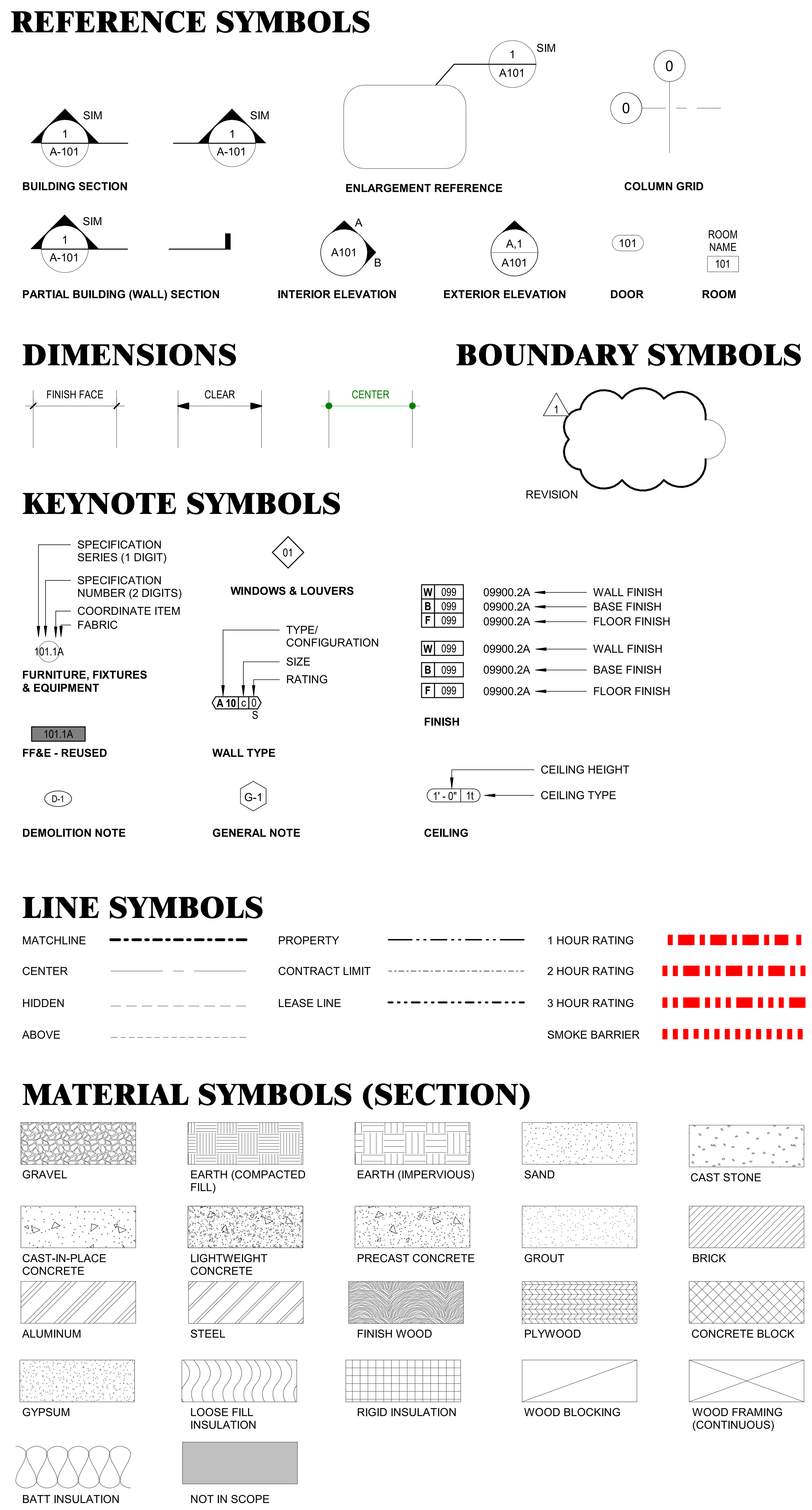

ABBREVIATIONS

AB - ANCHOR BOLT
AC - AIR CONDITIONING
ACC - ACCESSIBLE
ACOUS - ACOUSTICAL
AD - AREA DRAIN
ADD - ADDITIONAL
ADJ - ADJUSTABLE
AFF - ABOVE FINISH FLOOR
AGGR - AGGREGATE
ALT - ALTERNATE
ALUM - ALUMINUM
ANCH - ANCHOR
ANNO - ANODIZED
APC - ACOUSTICAL PANEL CEILING
APPD - APPROVED
APPROX - APPROXIMATE
ARCH - ARCHITECTURAL
ATC - ACOUTSTICAL TILE CEILING
AUTO - AUTOMATIC
AV - AUDIO VISUAL

BEJ - BRICK EXPANSION JOINT
BD - BOARD
BLDG - BUILDING
BLK - BLOCK
BM - BEAM
BOT - BOTTOM
BRK - BRICK
BSMT - BASEMENT
BT - BOLT
BUR - BUILT-UP ROOFING

CAB - CABINET
CAT - CATEGORY
CB - CATCH BASIN
CBD - CHALK BOARD
CBU - CEMENTITIOUS BACKER UNIT
CEM - CEMENT
CER - CERAMIC
CG - CORNER GUARD
CH - CHILLER
CHAN - CHANNEL
CI - CAST IRON
CIP - CAST-IN-PLACE
CJ - CONTROL JOINT / CONSTRUCTION JOINT
CL - CENTER LINE
CLG - CEILING
CLR - CLEAR
CMU - CONCRETE MASONRY UNIT
CNTR - COUNTER
CO - CLEANOUT
COL - COLUMN
COMPART - COMPARTMENT
CONC - CONCRETE
COND - CONDITION
CONN - CONNECTION
CONT - CONTINUOUS
CONTR - CONTRACTOR
COORD - COORDINATE
CORR - CORRIDOR
CT - CERAMIC TILE / COOLING TOWER
CTR - CENTER
CTSK - COUNTER SUNK
CW - COLD WATER (PIPING)

D - DEEP, DEPTH
DA - DISABLED
DBL - DOUBLE
DEG - DEGREE
DEMO - DEMOLITION
DEPT - DEPARTMENT
DET - DETAIL
DF - DRINKING FOUNTAIN
DIA - DIAMETER
DIFF - DIFFUSER
DIM - DIMENSION
DIS - DISABLED
DISP - DISPENSER
DMPF - DAMPPROOFING
DMT - DEMOUNTABLE
DN - DOWN
DO - DOOR OPENING
DP - DIMENSION POINT
DPTN - DEMOUNTABLE PARTITION
DR - DOOR
DRN - DRAIN
DS - DOWNSPOUT
DW - DISHWASHER
DWG - DRAWING
DWR - DRAWER

(E) - EXISTING
E - EAST
EA - EACH
EB - EXPANSION BOLT
EIFS - EXTERIOR INSULATION & FINISH SYSTEM
EFS - EXTERIOR FINISH SYSTEM
EJ - EXPANSION JOINT
EL - ELEVATION
ELEC - ELECTRICAL
ELEV - ELEVATOR
EMERG - EMERGENCY
ENCLO - ENCLOSURE
EP - ELECTRICAL PANELBOARD
EQ - EQUAL
EQUIP - EQUIPMENT
ESCAL - ESCALATOR
EWC - ELECTRICAL WATER COOLER
EXH - EXHAUST
EXP - EXPANSION
EXIST - EXISTING
EXT - EXTERIOR

FA - FIRE ALARM
FB - FACE BRICK
FC - FACE
FD - FLOOR DRAIN
FDC - FIRE DEPARTMENT CONNECTION
FE - FIRE EXTINGUISHER
FEC - FIRE EXTINGUISHER CABINET
FF&E - FURNITURE, FINISHES & EQUIPMENT
FHC - FIRE HOSE CABINET
FIN - FINISH
FL - FLOOR
FLASH - FLASHING
FLUOR - FLUORESCENT
FP - FIRE PROTECTION
FPG - FIREPROOFING
FR - FRAME
FT - FEET
FRTW - FIRE RETARDANT TREATED WOOD
FURN - FURNITURE
FURR - FURRING

G - GROUND
GA - GAUGE / GAGE
GALV - GALVANIZED
GB - GRAB BAR
GC - GENERAL CONTRACT(OR)
GRC - GLASS FIBER REINFORCED CONCRETE
GRG - GLASS FIBER REINFORCED GYPSUM
GL - GLASS
GR - GRADE
GRD - GROUND
GYPBD - GYPSUM WALLBOARD

H - HIGH / HEIGHT
HB - HOSE BIB
HC - HOLLOW CORE
HCP - HANDICAPPED
HDW - HARDWARE
HDWD - HARDWOOD
HS - HEAT STRENGTHEND (GLASS)
HM - HOLLOW METAL (STEEL FRAME)
HNDRL - HANDRAIL
HO - HOLD-OPEN
HORIZ - HORIZONTAL
HPT - HIGH POINT
HRC - HOSE REEL CABINET
HR - HOUR
HT - HEIGHT
HVAC - HEATING, VENTILATION, AIR CONDITIONING
HW - HOT WATER
HYDR - HYDRAULIC

ID - INSIDE DIAMETER
IN - INCH
INCAND - INCANDESCENT
INCL - INCLUDED / INCLUDING
INFO - INFORMATION
INSUL - INSULATION
INT - INTERIOR
INTERM - INTERMEDIATE
INV - INVERT
IPS - INTERNATIONAL PIPE STANDARD
IRMA - INVERTED ROOF MEMBRANE ASSEMBLY

JAN - JANITOR
JC - JANITOR'S CLOSET
JST - JOIST
JT - JOINT

K - KIP (1000 LBF)
KPL - KICK PLATE
KG - KILOGRAM
KIT - KITCHEN
KO - KNOCKOUT

L - LONG OR LITER (METRIC DOCS)
LAB - LABORATORY
LDG - LANDING
LAM - LAMINATE / LAMINATION
LAV - LAVATORY
LB - POUND
LF - LINEAR FOOT
LKR - LOCKER
LLH - LONG LEG HORIZONTAL
LLV - LONG LEG VERTICAL
LN - LINE
LT - LIGHT
LPT - LOW POINT

M - METER
MACH - MACHINE
MAINT - MAINTENANCE
MAS - MASONRY
MATL - MATERIAL
MAX - MAXIMUM
MB - MACHINE BOLT
MBL - MARBLE
MDF - MEDIUM DENSITY FIBERBOARD
MEP - MECHANICAL, ELECTRICAL, PLUMBING
MDO - MEDIUM DENSITY OVERLAY PLYWOOD
MECH - MECHANICAL
MEMB - MEMBRANE
MET - METAL
MEZZ - MEZZANINE
MFR - MANUFACTURER
MH - MANHOLE
MIN - MINIMUM
MISC - MISCELLANEOUS
MM - MILLIMETER
MO - MASONRY OPENING
MS - MACHINE SCREW
MTD - MOUNTED
MTG - MOUNTING
MTL - METAL
MULL - MULLION

N - NORTH
NA - NOT APPLICABLE
NC - NOISE CRITERIA
NIC - NOT IN CONTRACT
NO - NUMBER
NOM - NOMINAL
NTS - NOT TO SCALE

OA - OUTSIDE AIR
OC - ON CENTER
OCEW - ON CENTER EACH WAY
OD - OUTSIDE DIAMETER/DIMENSION
OFCI - OWNER FURNISHED, CONTR INSTALLED
OFOI - OWNER FURNISHED, OWNER INSTALLED
OFF - OFFICE
OH - OVER HEAD
OPH - OPPOSITE HAND
OPNG - OPENING
OPP - OPPOSITE
OPPHD - OPPOSITE HAND
ORD - OVERFLOW ROOF DRAIN
OUTS - OUTSIDE
OVHD - OVERHEAD

PAV - PAVING
PATD - PAPER TOWEL DISPENSER
PBD - PARTICLEBOARD
PC - PRECAST CONCRETE
PDF - POWER DRIVEN FASTENER
PERF - PERFORATED
PERIM - PERIMETER
PERP - PERPENDICULAR
PL - PLATE
PLAM - PLASTIC LAMINATE
PLAS - PLASTER
PLF - POUNDS PER LINEAR FOOT
PLYWD - PLYWOOD
PNL - PANEL
POL - POLISHED
PREFAB - PREFABRICATED

Q - QUARRY TILE
QTY - QUANTITY

(R) - RELOCATED
R - RADIUS OR RISER (PIPING)
RA - RETURN AIR
RAD - RADIUS
RB - RESILIENT BASE
RCP - REFLECTED CEILING PLAN
RD - ROOF DRAIN
RECOM - RECOMMENDED
RECPT - RECEPTACLE
REC - RECESSED
REF - REFERENCE
REFL - REFLECTED / REFLECTIVE / REFLECT
REFR - REFRIGERATOR
REG - REGISTER
REINF - REINFORCED / REINFORCING
REL - RELOCATE
REM - REMOVABLE
REQ - REQUIRE / REQUIRED
RESIL - RESILIENT
REV - REVISION / REVISED
RM - ROOM
RO - ROUGH OPENING
RTD - RATED
RTG - RATING
RWL - RAIN WATER LEADER

S - SOUTH
SA - SUPPLY AIR
SAN - SANITARY
SC - SOLID CORE
SCHED - SCHEDULE
SD - STORM DRAIN / SOAP DISPENSER
SECT - SECTION
STS - SELF TAP METAL SCREW
SF - SQUARE FEET/FOOT
SH - SPRINKLER HEAD
SHT - SHEET
SHR - SHOWER
SIM - SIMILAR
SM - SHEET METAL OR SQUARE METER (METRIC DOCS)
SND - SANITARY NAPKIN DISPENSER
SP - STANDPIPE
SPEC - SPECIFICATION
SPR - SPRINKLER
SPKR - SPEAKER
SQ - SQUARE
SSE - STRUCTURE SLAB ELEVATION
SST - STAINLESS STEEL
SSK - SERVICE SINK
STA - STATION
STD - STANDARD
STL - STEEL
STLJST - STEEL JOIST
STOR - STORAGE
STRG - STRINGER
STRL - STRUCTURAL
STRUC - STRUCTURAL
SUBCAT - SUBCATEGORY
SUSP - SUSPENDED
SYMM - SYMMETRICAL
SYS - SYSTEM

T&G - TONGUE AND GROOVE
T - TREAD / THERMOSTAT
TB - TOWEL BAR
TC - TOP OF CURB
TCONC - TOP OF CONCRETE
TEL - TELEPHONE OR TELECOM
TEMP - TEMPERATURE
TER - TERRAZZO
TGB - TOGGLE BOLT
THK - THICKNESS
THRES - THRESHOLD
THRU - THROUGH
TKBD - TACKBOARD
TMPD - TEMPERED
TO - TOP OF (SEE OTHER WORD)
TOS - TOP OF SLAB, TOP OF STRUCTURE
TOSTL - TOP OF STEEL
TP - TOP OF PAVEMENT
TPD - TOILET PAPER DISPENSER
TRACT - TRACTION
TV - TELEVISION
TW - TOP OF WALL
TYP - TYPICAL

UNFIN - UNFINISHED
UON - UNLESS OTHERWISE NOTED
UR - URINAL

VAC - VENTILATION AND AIR CONDITIONING
VCT - VINYL COMPOSITION TILE
VERT - VERTICAL
VEST - VESTIBULE
VIF - VERIFY IN FIELD
VR - VAPOR RETARDER
VT - VINYL TILE
VWC - VINYL WALL COVERING

W/ - WITH
W - WIDE, WIDTH/WEST
WC - WATER CLOSET
WD - WOOD
WDS - WOOD SCREW
WDW - WINDOW
W/O - WITHOUT
WP - WATERPROOFING
WPM - WATERPROOF MEMBRANE
WPT - WORK POINT
WR - WATER RESISTENT/REPELLANT
WS - WEATHERSTRIPPING
WSCT - WAINSCOT
WT - WEIGHT
WW - WALL TO WALL

OVERALL PROJECT GENERAL NOTES

1 **GENERAL PROVISIONS / SUPPLEMENTAL CONDITIONS**

1.01 CONTRACTOR SHALL COMPLY WITH THE APPLICABLE BUILDING CODES, LAWS, ORDINANCES, RULES, REGULATIONS AND LAWFUL ORDERS OF ANY PUBLIC AUTHORITY HAVING JURISDICTION UPON THE PERFORMANCE OF THE WORK.

1.02 CONTRACTOR SHALL BE RESPONSIBLE FOR SECURING AND PAYING FOR ALL REQUIRED PERMITS, LICENSES, INSPECTIONS, FEES, CERTIFICATES, ETC AS MAY BE REQUIRED FOR THE CONSTRUCTION AND OCCUPANCY OF THE PROJECT.

1.03 THE WORK SHALL BE PERFORMED IN ACCORDANCE WITH THE CONTRACT DOCUMENTS (WHICH INCLUDE BUT ARE NOT LIMITED TO THE CONSTRUCTION AGREEMENT, DRAWINGS, SPECIFICATIONS, ADDENDA AND MODIFICATIONS). THE CONTRACTOR SHALL REPORT DISCREPANCIES WITHIN OR BETWEEN THE CONTRACT DOCUMENTS TO THE ARCHITECT IN WRITING FOR CLARIFICATION PRIOR TO IMPLEMENTING THE WORK.

1.04 CONTRACTOR SHALL VISIT THE SITE AND VERIFY EXISTING CONDITIONS AND BUILDING SYSTEMS AFFECTED BY THE PROPOSED WORK, AS WELL AS EXISTING DIMENSIONS AND ELEVATIONS PRIOR TO COMMENCING WITH THE WORK. CONTRACTOR SHALL NOTIFY THE ARCHITECT IMMEDIATELY OF CONDITIONS THAT DEVIATE FROM THOSE INDICATED ON THE CONTRACT DOCUMENTS. COMMENCEMENT OF WORK CONSTITUTES ACCEPTANCE OF EXISTING CONDITIONS AS ACCEPTABLE TO PERFORM THE WORK.

1.05 THE ARCHITECT WILL NOT HAVE CONTROL OVER THE CHARGE OF AND WILL NOT BE RESPONSIBLE FOR CONSTRUCTION MEANS, METHODS, TECHNIQUES, SEQUENCES OR PROCEDURES, SHORING OR FOR SAFETY PRECAUTIONS AND PROGRAMS IN CONNECTION WITH THE WORK, SINCE THESE ARE SOLELY THE CONTRACTOR'S RESPONSIBILITY.

1.06 IN THE EVENT THE CONTRACTOR ENCOUNTERS MATERIALS BELIEVED TO BE HAZARDOUS THAT HAVE NOT BEEN RENDERED HARMLESS, THE CONTRACTOR SHALL IMMEDIATELY STOP THE WORK IN THE AFFECTED AREA AND REPORT THE CONDITION TO THE BUILDING OWNER IN WRITING. THE WORK IN THE AFFECTED AREA SHALL NOT BE RESUMED EXCEPT BY WRITTEN AGREEMENT BETWEEN THE CONTRACTOR AND BUILDING OWNER.

1.07 SUBMITTALS, SUCH AS SHOP DRAWINGS, SAMPLES, PRODUCT DATA, ETC, WHEN REQUIRED SHALL BE SUBMITTED BY THE CONTRACTOR FOR APPROVAL BY ARCHITECT PRIOR TO FABRICATION OR CONSTRUCTION. REVIEW AND APPROVAL OR OTHER ACTION TAKEN WILL BE ONLY FOR THE LIMITED PURPOSE OF CHECKING FOR CONFORMANCE WITH THE INFORMATION GIVEN AND THE DESIGN CONCEPT EXPRESSED IN THE CONTRACT DOCUMENTS.

1.08 THE PROVISION OF AND/OR ENGINEERING OF SHORING AS MAY BE REQUIRED BY THE CONTRACTOR'S DETERMINED MEANS AND METHOD OF CONSTRUCTION SHALL BE PROVIDED BY A STRUCTURAL ENGINEER LEGALLY REGISTERED TO PRACTICE IN THE STATE WHERE THE PROJECT IS LOCATED AND CONTRACTED BY THE CONTRACTOR.

1.09 SITE SHALL BE CLEANED THROUGHOUT THE DURATION OF THE PROJECT. REMOVE DUST, DEBRIS, OIL, STAINS, FINGERPRINTS AND LABELS FROM EXPOSED FINISHED SURFACES, INCLUDING GLAZING. CONTRACTOR SHALL BE RESPONSIBLE FOR THEIR OWN TRASH REMOVAL DURING CONSTRUCTION.

1.10 CONTRACTOR SHALL COORDINATE AND OBTAIN APPROVAL FROM THE GOVERNING JURISDICTION(S) AND AGENCY(S) FOR SPRINKLER AND FIRE SUPPRESSION SYSTEMS THROUGHOUT CONSTRUCTION. THIS INCLUDES, BUT IS NOT LIMITED TO, REQUIREMENTS FOR TEMPORARY MEASURES DURING CONSTRUCTION TO SATISFY THE SAFETY REQUIREMENTS OF THE AUTHORITIES HAVING REQUIREMENTS OF THE AUTHORITIES HAVING JURISDICTION SHALL BE PROVIDED WITHIN THE COST OF THE WORK AT NO EXTRA COST TO THE OWNER.

2 **DRAWINGS**

2.01 DO NOT SCALE DRAWINGS.

2.02 THREE DIMENSIONAL (3D) PERSPECTIVE VIEWS MAY BE PROVIDED FOR REFERENCE TO ASSIST THE CONTRACTOR IN UNDERSTANDING THE DESIGN CONCEPT FOR CERTAIN COMPONENTS. AS SUCH, THESE VIEWS ARE DIAGRAMMATIC IN NATURE AND ALL INFORMATION FOR CONSTRUCTION MAY NOT BE ILLUSTRATED IN THE PERSPECTIVE VIEW. CLARIFICATIONS AND/OR INTERPRETATIONS RELATING TO PERSPECTIVE VIEWS SHALL BE DIRECTED TO THE ARCHITECT.

2.03 BUILDING COMPONENTS AND/OR PORTIONS OF SYSTEMS AS MAY BE INDICATED ON THE ARCHITECTURAL DRAWINGS SUCH AS LIGHT FIXTURES, AIR DIFFUSERS/RETURNS, SPRINKLERS AND SPEAKERS, ETC ARE GENERALLY SHOWN TO DENOTE LOCATION AND LAYOUT PATTERN WHERE PLACEMENT IS CRITICAL TO APPEARANCE. THE ARCHITECTURAL DRAWINGS DO NOT REPRESENT COMPLETE SYSTEMS WHICH ARE TO BE PROVIDED AND AS MAY BE REQUIRED BY OTHER CONTRACT DOCUMENTS.

2.04 ITEMS NOTED AS "TYPICAL" OR "TYP" MEANS TO APPLY TO OTHER, SIMILAR LOCATIONS.

2.05 ITEMS NOTED AS "SIMILAR" OR "SIM" MEANS THAT A COMPONENT IS SIMILAR IN CHARACTER AND FINISH TO THE REFERENCED DETAIL BUT MAY VARY IN DIMENSION, LOCATION OR ORIENTATION.

3 **MATERIALS, SYSTEMS AND COMPONENTS**

3.01 ALL MATERIALS, SYSTEMS, FINISHES AND COMPONENTS SHALL BE PROVIDED AS INDICATED IN THE CONTRACT DOCUMENTS. PROPOSED SUBSTITUTIONS OF MATERIALS, SYSTEMS, COMPONENTS, FINISHES AND/OR PRODUCT SHALL BE SUBMITTED BY THE CONTRACTOR TIMELY WITH THE SEQUENCE OF CONSTRUCTION AND WITH PROPER, DETAILED INFORMATION FOR CONSIDERATION BY THE OWNER AND/OR ARCHITECT. PROPOSED SUBSTITUTIONS MAY ONLY BE INCORPORATED INTO THE WORK IF ACCEPTED BY THE OWNER AND/OR ARCHITECT.

3.02 CONTRACTOR SHALL PROVIDE ALL SUPPLEMENTAL MATERIAL REQUIRED TO PROPERLY INSTALL, SUPPORT AND BRACE ALL COMPONENTS OF THE WORK.

3.03 CONTRACTOR SHALL VERIFY AND COORDINATE CONDITIONS AND DIMENSIONS BEFORE FABRICATION OF ANY WORK.

3.04 PROVIDE FIRE-RETARDANT WOOD BLOCKING OR STEEL REINFORCING AS REQUIRED IN PARTITIONS AND IN CEILINGS TO SUPPORT MILLWORK, LIGHT FIXTURES, ACCESSORIES, ARTWORK, HARDWARE, HANDRAILS AND/OR OTHER APPLIED FINISH SYSTEMS.

4 **FINISHES**

4.01 CONTRACTOR SHALL PROVIDE MEANS TO LEVEL CONCRETE FLOOR SLABS AND/OR REPAIR ACCESS FLOORING TO RECEIVE NEW FINISH FLOORING IN ALL AREAS WHERE DEMOLITION OF EXISTING TILE, PARTITIONS, CARPETING, ETC CAUSES AND/OR EXPOSES UNEVENNESS IN THE FLOOR OR SLAB.

4.02 PATCH CONSTRUCTION BY FILLING, PREPARING, REFINISHING, CLOSING UP AND SIMILAR OPERATIONS FOLLOWING PERFORMANCE OF OTHER WORK. PATCH WITH DURABLE SEAMS THAT ARE CONCEALED AND NOT VISIBLE. TEST AND INSPECT PATCHED AREAS AFTER COMPLETION TO VERIFY/DEMONSTRATE INTEGRITY OF INSTALLATION.

4.03 RESTORE FINISHES OF PATCHED AREAS AND EXTEND FINISH RESTORATION INTO ADJOINING CONSTRUCTION IN A MANNER THAT WILL CONCEAL VISIBLE EVIDENCE OF PATCHING AND REFINISHING.

4.04 WHERE PATCHING OCCURS IN A PAINTED SURFACE, APPLY PRIMER AND INTERMEDIATE PAINT COATS OVER THE PATCH AND SUPPLY FINAL PAINT COAT OVER THE ENTIRE UNBROKEN SURFACE CONTACTING THE PATCH. PROVIDE ADDITIONAL COATS UNTIL PATCH BLENDS WITH ADJACENT SURFACE.

4.05 MATERIALS USED FOR INTERIOR WALLS, CEILINGS AND TRIM SHALL BE CLASS A FIRE RATED UNLESS OTHERWISE NOTED.

4.06 INSTALL FINISH MATERIALS IN ACCORDANCE WITH MANUFACTURER'S RECOMMENDED SPECIFICATIONS, ENVIRONMENTAL CONDITIONS, SURFACE PREPARATIONS, ADHESIVES, COMPATIBILITY WITH ADJACENT MATERIALS, BACKINGS, ETC

4.07 ELECTRICAL SWITCH AND COVER PLATES, SURFACE HARDWARE, GRILLES, ETC SHALL BE INSTALLED AFTER PAINTING AND/OR APPLICATION OF WALL/FLOOR COVERINGS.

PRIME
A Stratus Team Company
3715 NORTHSIDE PARKWAY NW
300 NORTHCREEK, SUITE 202
ATLANTA, GEORGIA 30327
404-425-7100

PROJECT:
DALTON PICKLEBALL COMPLEX
904 CIVIC DRIVE, DALTON, GA 30721

PREPARED FOR:
City of Dalton

REVISIONS

NO.	DATE	DESCRIPTION

SEAL
STATE OF GEORGIA
REGISTERED ARCHITECT
DATE: 08/09/2024

© 2024 PRIME ENGINEERING, INC. Scales, as stated hereon, are valid on the original drawing, the dimensions of which are noted hereon. These scales, noted hereon, are hereby changed by the ratio of the overall sheet dimensions of the print to corresponding dimensions of the original drawing. This drawing is the property of PRIME ENGINEERING, INCORPORATED and is not to be reproduced or copied in whole or in part. It is only to be used for the project and site specifically identified herein and is not to be used on any other project. It is to be returned upon request.

DRAWING TITLE
LEGENDS, ABBREVIATIONS, NOTES

DRAWN BY JL
DESIGNED BY MP
CHECKED BY JG
DRAWING DATE 08/09/2024
DRAWING SCALE As indicated
PROJECT NUMBER 2024-0283
DRAWING NUMBER A-001

NOT ISSUED FOR CONSTRUCTION

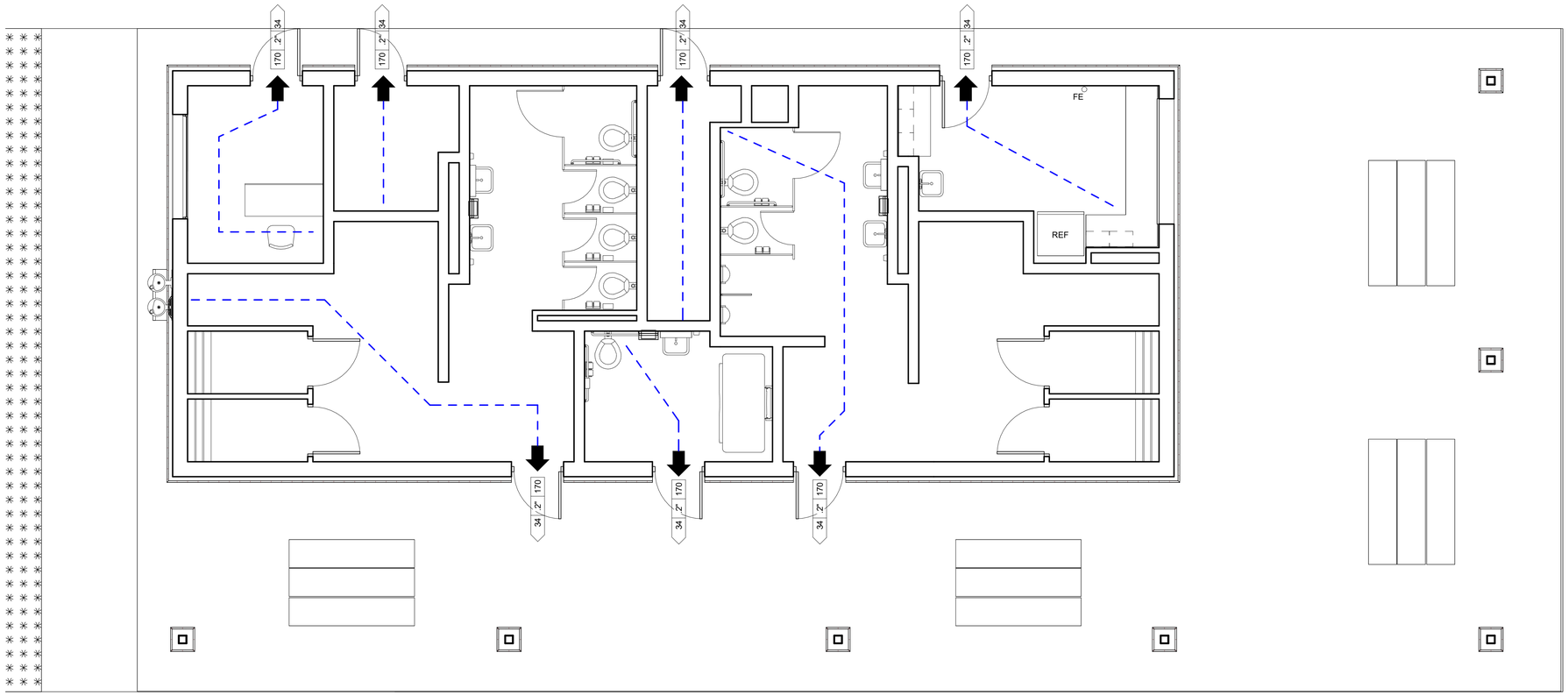

1 / A-002 01 - LIFE SAFETY PLAN
1/4" = 1'-0"

BUILDING CODE INFORMATION

APPLICABLE CODES:

INTERNATIONAL BUILDING CODE (IBC), 2018 W/ STATE OF GEORGIA AMENDMENTS
NFPA 101, LIFE SAFETY CODE, 2018 W/ STATE OF GEORGIA AMENDMENTS
INTERNATIONAL FIRE CODE 2018 W/ STATE OF GEORGIA AMENDMENTS
INTERNATIONAL MECHANICAL CODE 2018 W/ STATE OF GEORGIA AMENDMENTS
INTERNATIONAL PLUMBING CODE 2018 W/ STATE OF GEORGIA AMENDMENTS
NATIONAL ELECTRICAL CODE 2020
INTERNATIONAL FUEL GAS CODE 2018 W/ STATE OF GEORGIA AMENDMENTS
INTERNATIONAL ENERGEY CONSERVATION CODE 2015 W/ STATE OF GEORGIA AMENDMENTS
AMERICANS WITH DISABILITIES ACT STANDARDS FOR ACCESSIBLE DESIGN, 2010
ANSI A117.1 2003

PRIMARY USE GROUP: B (Business)

CONSTRUCTION TYPE: IIB, NON-COMBUSTIBLE, NON-SPRINKLERED

BUILDING AREA:
PROPOSED GROSS AREA: 1,603 sqft
ALLOWABLE AREA: 23,000 sqft (Table 506.2)

BUILDING HEIGHT:
PROPOSED HEIGHT: 1 story
14'6" above grade plane
ALLOWABLE HEIGHT: 3 stories
55' above grade plane

FIRE RESISTANCE RATING REQUIREMENTS FOR BUILDING ELEMENTS(TABLE 601)

PRIMARY STRUCUTRAL FRAME	0HR
BEARING WALLS (EXTERIOR)	0HR
BEARING WALLS (INTERIOR)	0HR
NONBEARING WALLS (EXTERIOR)	0HR
NONBEARING WALLS (INTERIOR)	0HR
FLOOR CONSTRUCTION	0HR
ROOF CONSTRUCTION	0HR
PORTABLE FIRE EXTINGUISHERS	PROVIDE EVERY 75' MAX TRAVEL DISTANCE
MANUAL ALARM	NOT REQUIRED PER 907.2.2
SMOKE DETECTORS	NOT REQUIRED PER 907.2.2

MEANS OF EGRESS (NFPA 101)

REQUIRED NUMBER OF EXITS	1 PER SPACE (38.2.4.3)
PROVIDED NUMBER OF EXITS	1 PER SPACE
REQUIRED EGRESS COMPONENT WIDTH	32" CLEAR (7.2.1.2.3.2)
PROVIDED EGRESS COMPONENT WIDTH	PER PLANS (32" MINIMUM)
MAXIMUM EXIT ACCESS TRAVEL DISTANCE	200' (38.2.6.3)
OCCUPANT LOAD FACTOR	150 GROSS (BUSINESS USE)

LIFE SAFETY LEGEND

ROOM NAME
450 SF
100
5
AREA OF ROOM
OCCUPANCY FACTOR (SF/PERSON)
CALCULATED OCCUPANCY LOAD

36" 2" 180
TOTAL EGRESS CAPAPCITY OF OPENING (# PERSONS)
EGRESS FACTOR
EGRESS WIDTH (INCHES)

2 — NUMBER OF OCCUPANTS FROM ROOM OR AREA

36 — NUMBER OF OCCUPANTS COMBINED FROM MULTIPLE ROOMS OR AREAS

PATH OF TRAVEL

FIRE RATING -1 HOUR

SMOKE PARTITION

FE — FIRE EXTINGUISHER WITH CABINET

FE — BRACKET MOUNTED FIRE EXTINGUISHER

PROJECT NORTH

PRIME
A Stratus Team Company
3715 NORTHSIDE PARKWAY NW
400 NORTHCREEK, SUITE 200
ATLANTA, GEORGIA 30327
404-425-7100

PROJECT:
DALTON PICKLEBALL COMPLEX
904 CIVIC DRIVE, DALTON, GA 30721

PREPARED FOR:
City of Dalton

REVISIONS

NO.	DATE	DESCRIPTION

SEAL
STATE OF GEORGIA
JASON MICHAEL PRESSLEY
CERTIFICATE NO. 025722
REGISTERED ARCHITECT
DATE: 08/09/2024

© 2024 PRIME ENGINEERING, INC. Scales, as stated hereon, are valid on the original drawing; the dimensions of which are 24 by 36 inches. These scales, noted hereon, are hereby changed by the ratio of the overall sheet dimensions of the print to corresponding dimensions of the original drawing. This drawing is the property of PRIME ENGINEERING, INCORPORATED and is not to be reproduced or copied in whole or in part. It is not to be used for the project and site specified herein identified herein and is not to be used on any other project. It is to be returned upon request.

DRAWING TITLE
LIFE SAFETY PLAN, CODE SUMMARY

DRAWING DATE 08/09/2024	DRAWN BY JL	DESIGNED BY MP	CHECKED BY JG
DRAWING SCALE As indicated			
PROJECT NUMBER 2024-0283			
DRAWING NUMBER A-002			

NOT ISSUED FOR CONSTRUCTION

Autodesk Docs://Dalton - Pickleball/Dalton-Pickleball Site 1.rvt

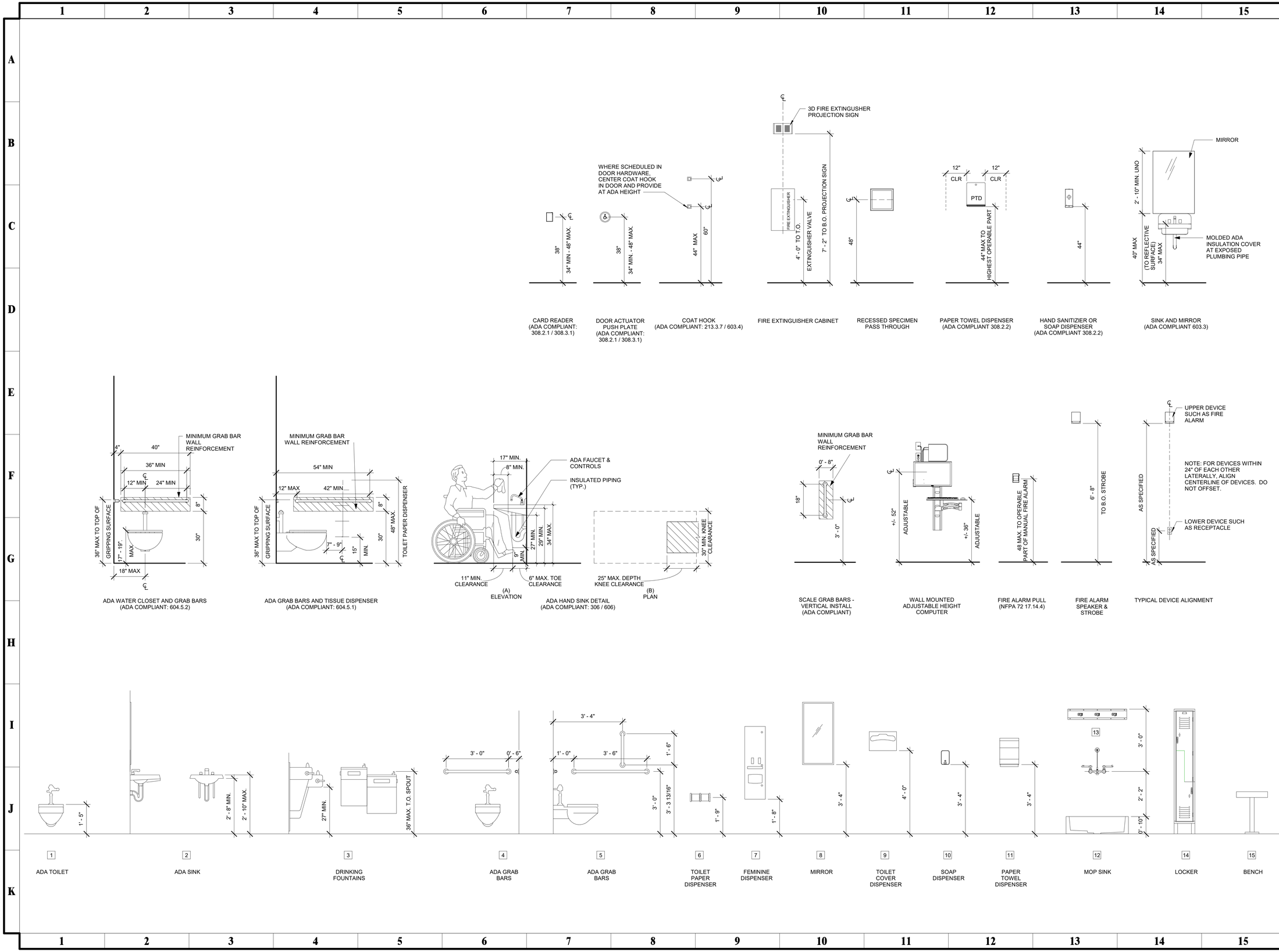

PRIME
A Stratus Team Company
3715 NORTHSIDE PARKWAY NW
400 NORTHCREEK, SUITE 200
ATLANTA, GEORGIA 30327
404-425-7100

PROJECT:
DALTON PICKLEBALL COMPLEX
904 CIVIC DRIVE, DALTON, GA 30721

PREPARED FOR:
City of Dalton

REVISIONS

NO.	DATE	DESCRIPTION

SEAL
STATE OF GEORGIA
JASON MICHAEL GARZA
CERTIFICATE NO. 0000
REGISTERED ARCHITECT
DATE: 08/09/2024

© 2024 PRIME ENGINEERING, INC. Scales, as stated hereon, are valid on the original drawing; the dimensions of which are 24 by 36 inches. These scales, noted hereon, are hereby changed by the ratio of the overall sheet dimensions of the print to corresponding dimensions of the original drawing. This drawing is the property of PRIME ENGINEERING, INCORPORATED and is not to be reproduced or copied in whole or part. It is loaned for the project and is to be used for identified herein and is not to be used on any other project. It is to be returned upon request.

DRAWING TITLE
TYPICAL MOUNTING HEIGHTS

DRAWN BY	JL
DESIGNED BY	MP
CHECKED BY	JG
DRAWING DATE	08/09/2024
DRAWING SCALE	1/2" = 1'-0"
PROJECT NUMBER	2024-0283
DRAWING NUMBER	A-003

NOT ISSUED FOR CONSTRUCTION

Autodesk Docs://Dalton - Pickleball/Dalton-Pickleball Site 1.rvt

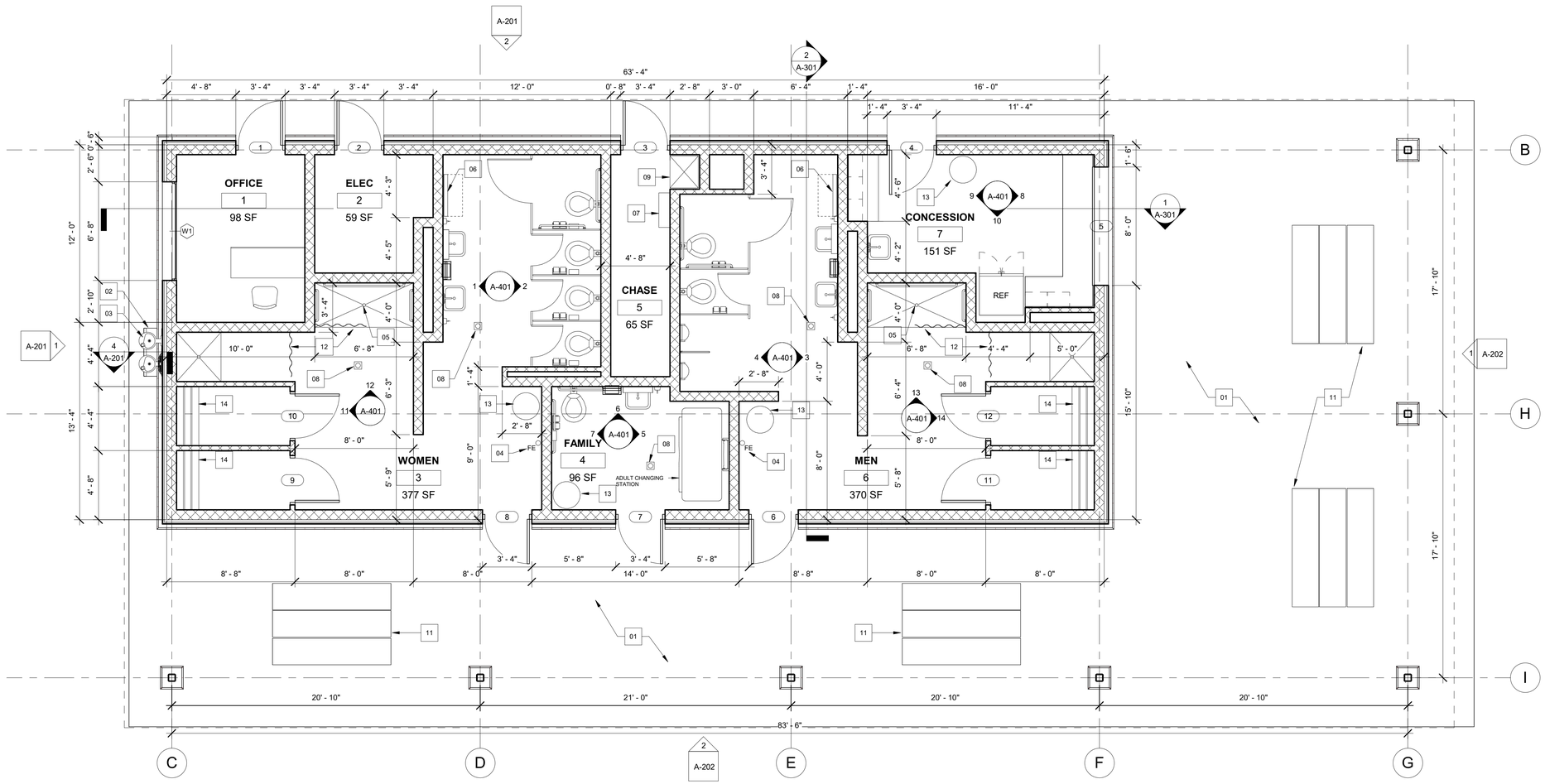

1 PROPOSED FLOOR PLAN
A-101 1/4" = 1'-0"

GENERAL NOTES

1. BUILDING DIMENSIONS ARE TO FACE OF CMU WALL, FACE OF TOILET PARTITIONS, OR TO CENTERLINE OF FIXTURES, UNLESS OTHERWISE NOTED. SEE INTERIOR ELEVATIONS FOR ADDITIONAL INFORMATION.
2. TOP OF CONCRETE SLAB IS SET AT 0'-0" RELATIVE ELEVATIONS. SEE CIVIL DRAWINGS FOR ABSOLUTE SLAB ELEVATION.
3. PROVIDE ACCESSIBLE SIGNAGE AT RESTROOM DOORS, SEE DETAIL A3/A-601.
4. ALL WALLS ARE 8" CMU, UNLESS OTHERWISE NOTED. REFERENCE STRUCTURAL FOR TYPICAL SECTION.
5. SLOPE ALL EXTERIOR CONCRETE PAVEMENT AND SLABS AWAY FROM THE BUILDING, 1/8":12" MINIMUM, 1/4":12" MAX AT DOORS. REF CIVIL DRAWINGS FOR SPOT ELEVATIONS
6. SEE DETAILS ON B2 & D2/A-502 FOR EXTERIOR FIBER CEMENT LAP SIDING DETAILS.
7. PROVIDE POWDER COATED STEEL TOILET PARTITIONS AS INDICATED.
8. SEE A1/A-401 FOR STANDARD MOUNTING ELEVATIONS FOR FIXTURES.
9. SEE B3/A-401 & B4/A-401 FOR STANDARD TOILET STALL ELEVATIONS.
10. SEE ELEVATIONS D1, D2, B1, AND B2 ON SHEET A-401 FOR ACCESSIBLE TOILET STALL ELEVATIONS.

NEW WORK NOTES

01 CONCRETE PAVEMENT AROUND BUILDING. SLOPE AWAY FROM BUILDING ON ALL SIDES. SEE CIVIL DRAWINGS FOR STANDARD SIDEWALK PAVEMENT DETAIL & ELEVATIONS.
02 DUAL HEIGHT DRINKING FOUNTAIN WITH BOTTLE-FILLER.
03 WALL-MOUNTED PIPE RAIL FOR CANE DETECTION ON BOTH SIDES OF DRINKING FOUNTAIN - REF D1/A-201.
04 BRACKET-MOUNTED FIRE EXTINGUISHER.
05 SHOWER- SLOPE SLAB 1/4"/FT MINIMUM TO DRAIN
06 DIAPER CHANGING STATION. SEE A1/A-401 FOR MOUNTING HEIGHT.
07 MOP AND BROOM HOLDER. SEE PLUMBING DRAWINGS
08 FLOOR DRAINS. SLOPE CONCRETE SLAB TOWARDS DRAINS AS INDICATED ON STRUCTURAL DRAWINGS.
09 MOP SINK AND FAUCET.
10 PREFINISHED METAL DOWNSPOUT WITH CONCRETE SPLASH BLOCK- SEE CIVIL DRAWINGS.
11 PREFABRICATED PICNIC TABLE WITH BENCHES- MATCH SIMILAR CITY FACILITY FURNITURE MANUFACTURER- SEE CIVIL DRAWINGS.
12 SHOWER CURTAIN AND ROD
13 32 GAL WASTE CONTAINER- SEE EQUIPMENT LIST SHEET A401
14 42" WALL MOUNT BENCH- SEE EQUIPMENT LIST SHEET A401

NORTH

PRIME
A Stratus Team Company
3715 NORTHSIDE PARKWAY NW
400 NORTHCREEK, SUITE 200
ATLANTA, GEORGIA 30327
404-425-7100

PROJECT:
DALTON PICKLEBALL COMPLEX
904 CIVIC DRIVE, DALTON, GA 30721

PREPARED FOR:
City of Dalton

REVISIONS

NO.	DATE	DESCRIPTION

SEAL
STATE OF GEORGIA
JASON MICHAEL LEGGETT
CERTIFICATE NO. 036787
REGISTERED ARCHITECT
DATE: 08/09/2024

© 2024 PRIME ENGINEERING, INC.
Scales, as stated hereon, are valid on the original drawing; the dimensions of which are 24 by 36 inches. These scales, noted hereon, are hereby changed by the ratio of the overall sheet dimensions of the print to corresponding dimensions of the original drawing. This drawing is the property of PRIME ENGINEERING, INCORPORATED and is not to be reproduced or copied in whole or in part. It is only to be used for the project and site specifically identified herein and is not to be used on any other project. It is to be returned upon request.

DRAWING TITLE
PROPOSED FLOOR PLAN

DRAWING DATE	08/09/2024
DRAWING SCALE	1/4" = 1'-0"
PROJECT NUMBER	2024-0283
DRAWING NUMBER	A-101
DRAWN BY	JL
DESIGNED BY	MP
CHECKED BY	JG

NOT ISSUED FOR CONSTRUCTION

Autodesk Docs://Dalton - Pickleball/Dalton-Pickleball Site 1.rvt

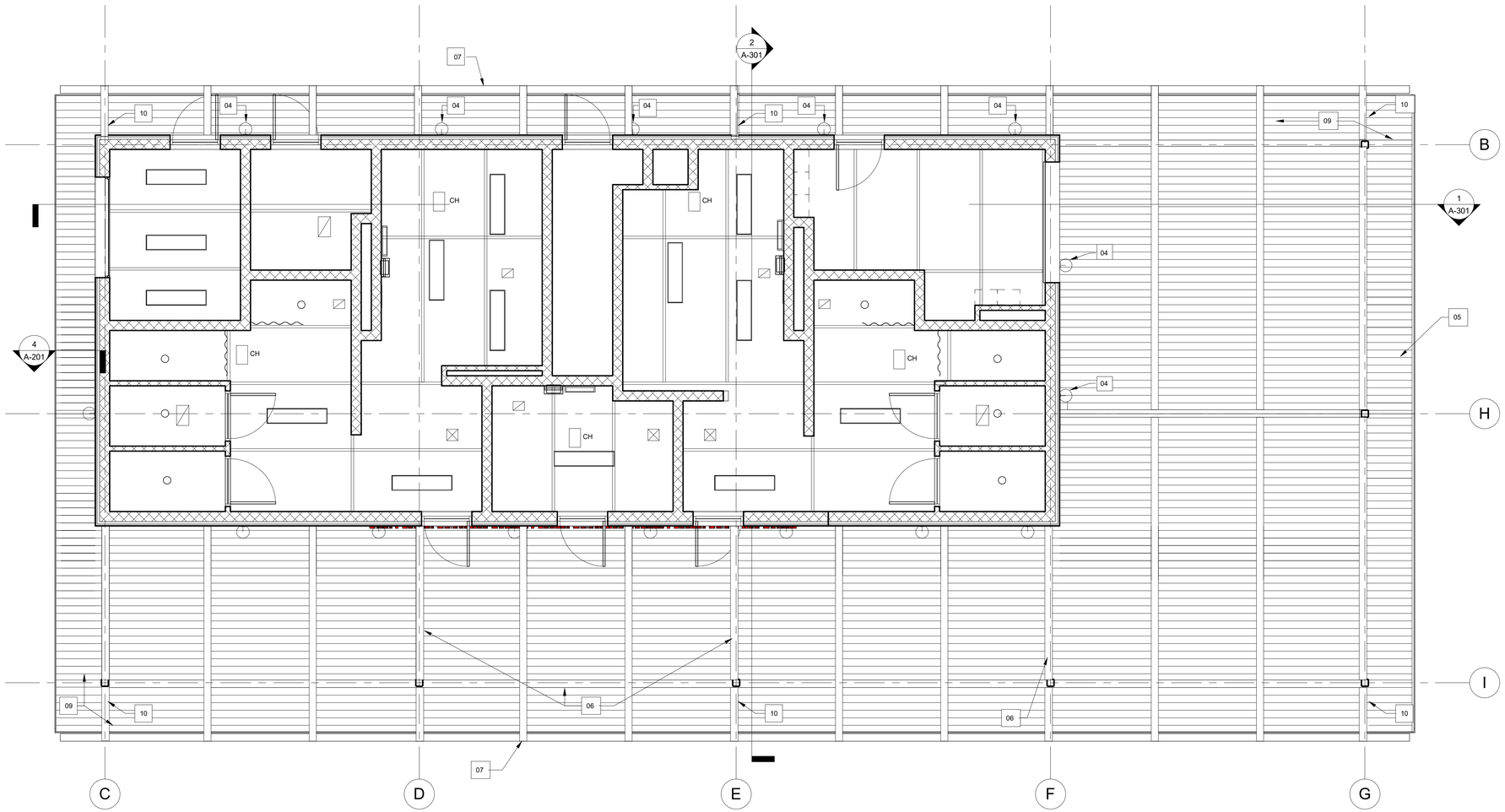

1 REFLECTED CEILING PLAN
A-102 1/4" = 1'-0"

GENERAL NOTES

1. THIS REFLECTED CEILING PAN IS PROVIDED TO DOCUMENT CEILING DESIGN INTENT. SEE ALSO MECHANICAL AND ELECTRICAL DOCUMENTATION FOR COMPLETE INFORMATION INCLUDING SWITCH LOCATIONS, CIRCUITING, AND WIRING LAYOUT . ALL MEP-FP DEVICE LOCATIONS NOT SHOWN ON DRAWINGS, OR IN CONFLICT WITH MEP/FP DRAWINGS ARE TO BE COORDINATED WITH THE ARCHITECT PRIOR TO INSTALLATION. IN THE EVENT OF DISCREPANCIES BETWEEN ARCHITECT'S REFLECTED CEILING PLAN AND ENGINEER'S PLANS, IMMEDIATELY NOTIFY THE ARCHITECT IN WRITING BEFORE ORDERING MATERIALS OR PROCEEDING WITH THE WORK.
2. WITHIN A ROOM OR AREA, THE CONTRACTOR SHALL ESTABLISH A SINGLE FLOOR ELEVATION THAT IS TO BE USED AS THE ORIGIN FOR ALL CEILING HEIGHTS ABOVE FINISHED FLOOR.
3. VERIFY FIELD CONDITIONS AND LOCATIONS OF ALL MEP/FP AND STRUCTURAL ELEMENTS. CONTRACTOR TO COORDINATE THE WORK OF ALL TRADES NECESSARY TO MAINTAIN THE FINISH CEILING HEIGHTS INDICATED. INSTALL DUCTWORK TIGHT TO UNDERSIDE OF BEAMS WITH SMALL SPACE TO AVOID VIBRATION. INSTALLATION OR ALTERATION OF DUCTWORK, PIPING, OR OTHER EQUIPMENT THAT WILL REQUIRE FASCIAS, SOFFITS AND OTHER TRANSITIONS IN CEILING HEIGHT SHALL BE REVIEWED WITH THE ARCHITECT PRIOR TO PROCEEDING. CONTRACTOR TO PROVIDE COMPLETE COORDINATION DRAWINGS FOR THE ARCHITECT AND ENGINEER'S REVIEW.
4. ALL CEILING MOUNTED DEVICES SHALL BE WHITE.
5. THERE SHALL BE NO COMBUSTIBLE MATERIALS IN THE PLENUM SPACE.
6. PROVIDE BLOCKING ABOVE CEILING REQUIRED FOR ALL CEILING MOUNTED EQUIPMENT. PROVIDE ADDITIONAL SUPPORT FOR LIGHT FIXTURES AS RECOMMENDED BY FIXTURE MANUFACTURER.
7. LOCATE ANY CONTROLS THAT NEED ACCESSING OVER CEILING AREAS. DO NOT PLACE ANY ABOVE HARD CEILINGS, UNLESS APPROVED BY ARCHITECT.
8. PROVIDE CEILING ACCESS REQUIRED FOR EQUIPMENT AND SYSTEM MAINTENANCE. MATCH ADJACENT FINISH U.N.O. SYSTEMS AND EQUIPMENT REQUIRING ACCESS SHALL BE LOCATED AT ACCESS PANELS
9. ALL ACCESS PANELS IN HARD CEILINGS SHALL BE FRAMELESS, LOCATIONS SHALL BE COORDINATED WITH ARCHITECT. GROUP DEVICES TO MINIMIZE THE NUMBER AND SIZE OF ACCESS PANELS.
10. WHEN MULTIPLE SWITCHES OCCUR IN CLOSE PROXIMITY GANG UNDER SINGLE SWITCH PLATE.
11. INSTALL NEW THERMOSTATS CLOSE TO DOOR OPENINGS. DO NOT INSTALL IN CENTER OF WALL. ARCHITECT AND CLIENT TO APPROVE ALL LOCATIONS.
12. ALL LAMPS SHALL BE SAME WITHIN SAME FIXTURE TYPES
13. FOLLOWING COMPLETION OF THE CEILING INSTALLATION, ALL JOINTS SHALL BE STRAIGHT, TRUE TO LINE, WITH EXPOSED SURFACES FLUSH AND LEVEL

RCP LEGEND

- BEADED FIBER CEMENT BOARD- PAINTED
- STRUCTURE ABOVE- T&G TREATED WOOD DECKING OVER PAINTED STEEL TUBE FRAMING
- WALL MOUNTED LIGHT FIXTURE- SEE ELECTRICAL DRAWINGS
- BEADED FIBER CEMENT BOARD- PAINTED
- 9'-0" A — CEILING TAG: HEIGHT AND TYPE MARK
- F — EXHAUST FAN- SEE MECH DRAWINGS
- ER — EXHAUST REGISTER (CEILING)- SEE MECH. DRAWINGS
- SUPPLY REGISTER (CEILING) SEE MECH. DRAWINGS
- CH — CEILING HEATER- SEE MECH DRWGS

KEYNOTES

01 NOT USED.
02 NOT USED.
03 PROVIDE LOCKABLE 24" x 24" FLUSH CEILING ACCESS DOOR WITH EXPOSED FLANGES AS INDICATED.
04 PROVIDE EXTERIOR LIGHTING AS INDICATED, SEE ELECTRICAL DRAWINGS.
05 CONTINUOUS VENTED RIDGE, SEE DETAIL D4/A-501.
06 PAINTED STEEL FRAMING- SEE STRUCTURAL DRAWINGS.
07 PREFINISHED METAL
08 NOT USED.
09 VENTILATED FIBER CEMENT SOFFIT, TYP AT EAVES.
10 PREFINISHED METAL DOWNSPOUT WITH TRANSITION TO SPLASHBLOCK AT GRADE DRAINAGE SYSTEM- SEE CIVIL DRAWINGS

NORTH

PRIME
A Stratus Team Company
3715 NORTHSIDE PARKWAY NW
400 NORTHCREEK, SUITE 200
ATLANTA, GEORGIA 30327
404-425-7100

PROJECT:
DALTON PICKLEBALL COMPLEX
904 CIVIC DRIVE, DALTON, GA 30721

PREPARED FOR:
City of Dalton

REVISIONS

NO.	DATE	DESCRIPTION

SEAL
STATE OF GEORGIA — JASON MICHAEL LEEST — CERTIFICATE NO. — REGISTERED ARCHITECT
DATE: 08/09/2024

© 2024 PRIME ENGINEERING, INC. Scales, as stated hereon, are valid on the original drawing; the dimensions of which are 24 by 36 inches. These scales, noted hereon, are hereby changed by the ratio of the overall sheet dimensions of the print to corresponding dimensions of the original drawing. This drawing is the property of PRIME ENGINEERING, INCORPORATED and is not to be reproduced or copied in whole or in part. It is not to be used for the project and/or specifications identified herein and is not to be used on any other project. It is to be returned upon request.

DRAWING TITLE
BUILDING REFLECTED CEILING PLAN

DRAWING DATE	08/09/2024
DRAWING SCALE	As indicated
PROJECT NUMBER	2024-0283
DRAWING NUMBER	A-102
DRAWN BY	JL
DESIGNED BY	MP
CHECKED BY	JG

NOT ISSUED FOR CONSTRUCTION

Autodesk Docs://Dalton - Pickleball/Dalton-Pickleball Site 1.rvt

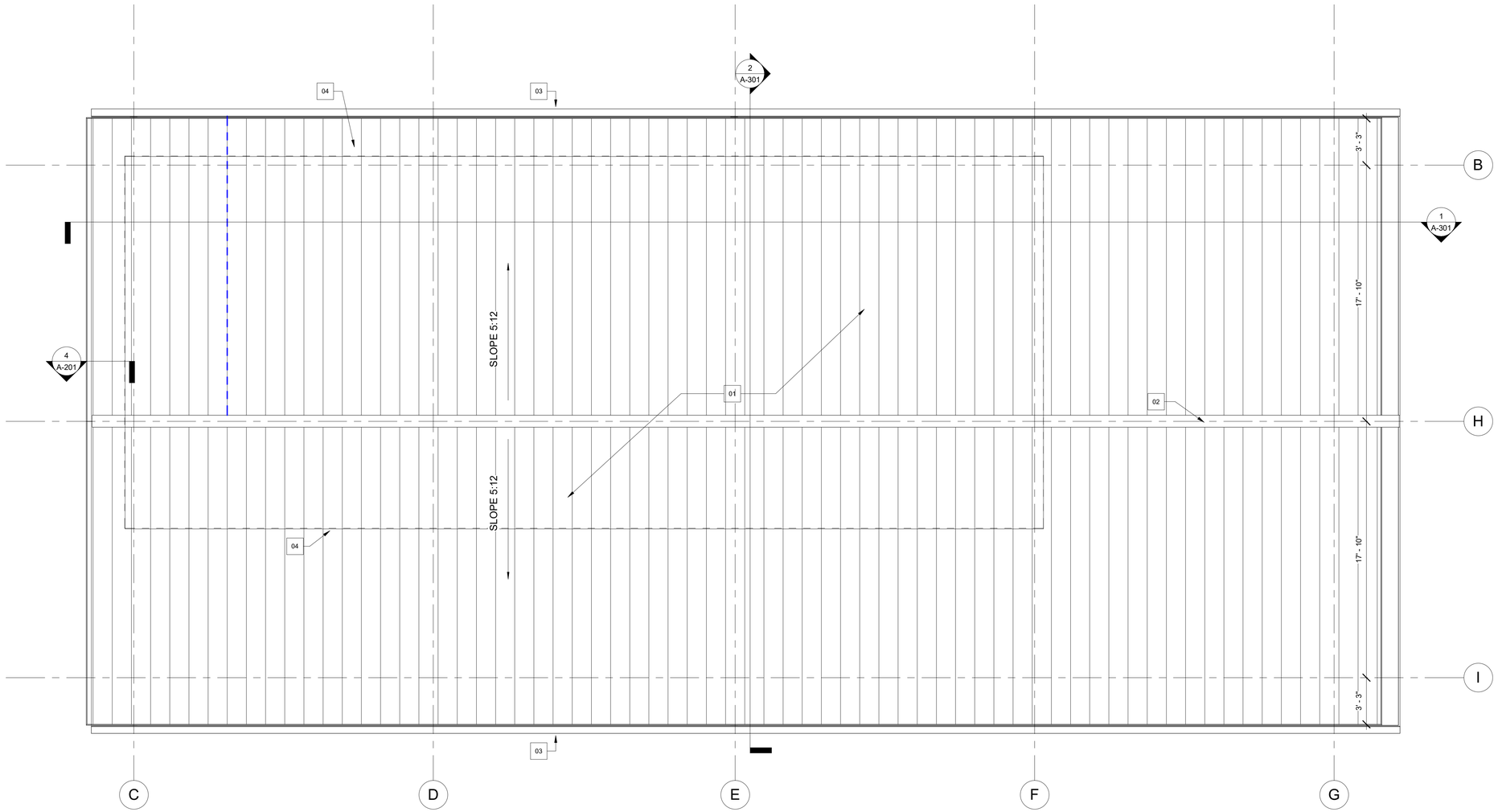

1 ROOF PLAN
A-103 1/4" = 1'-0"

GENERAL NOTES

1. PAINT ALL EXTERIOR SIDING, TRIM, EAVE, FASCIA AND STRUCTURAL STEEL. T&G SOFFIT DECKING TO BE FINISHED GRADE UNPAINTED WOOD. FINAL COLORS TO BE DETERMINED BY OWNER.

ROOF KEYNOTES

01 STANDING SEAM METAL ROOF AND UNDERLAYMENT WITH TRIM AT EAVE AND RAKE.

02 PREFINISHED METAL RIDGE VENT, TO MATCH ROOF COLOR.

03 PREFINISHED METAL GUTTER SYSTEM.

04 EXTERIOR FACE OF BUILDING BELOW.

NORTH

PRIME
A Stratus Team Company
3715 NORTHSIDE PARKWAY NW
400 NORTHCREEK, SUITE 200
ATLANTA, GEORGIA 30327
404-425-7100

PROJECT:
DALTON PICKLEBALL COMPLEX
904 CIVIC DRIVE, DALTON, GA 30721

PREPARED FOR:
City of Dalton

REVISIONS

NO.	DATE	DESCRIPTION

SEAL
STATE OF GEORGIA
JASON MICHAEL LEGGETT
CERTIFICATE NO. 025724
REGISTERED ARCHITECT
DATE: 08/09/2024

© 2024 PRIME ENGINEERING, INC. Scales, as stated hereon, are valid on the original drawing; the dimensions of which are 24 by 36 inches. These scales, noted hereon, are hereby changed by the ratio of the overall sheet dimensions of the print to corresponding dimensions of the original drawing. This drawing is the property of PRIME ENGINEERING, INCORPORATED and is not to be reproduced or copied in whole or in part. It is only to be used for the project and site specifically identified herein and is not to be used on any other project. It is to be returned upon request.

DRAWING TITLE
BUILDING ROOF PLAN

DRAWING DATE	08/09/2024
DRAWN BY	JL
DRAWING SCALE	1/4" = 1'-0"
DESIGNED BY	MP
PROJECT NUMBER	2024-0283
CHECKED BY	JG
DRAWING NUMBER	A-103

NOT ISSUED FOR CONSTRUCTION

Autodesk Docs://Dalton - Pickleball/Dalton-Pickleball Site 1.rvt

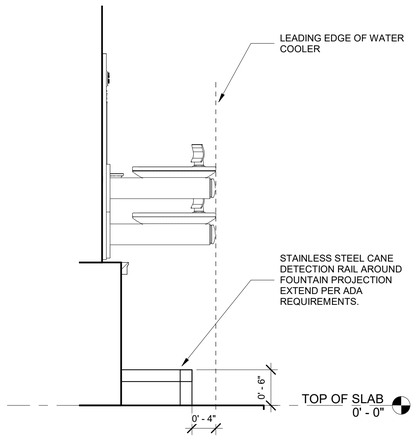

4 FOUNTAIN CANE
A-201 1" = 1'-0"

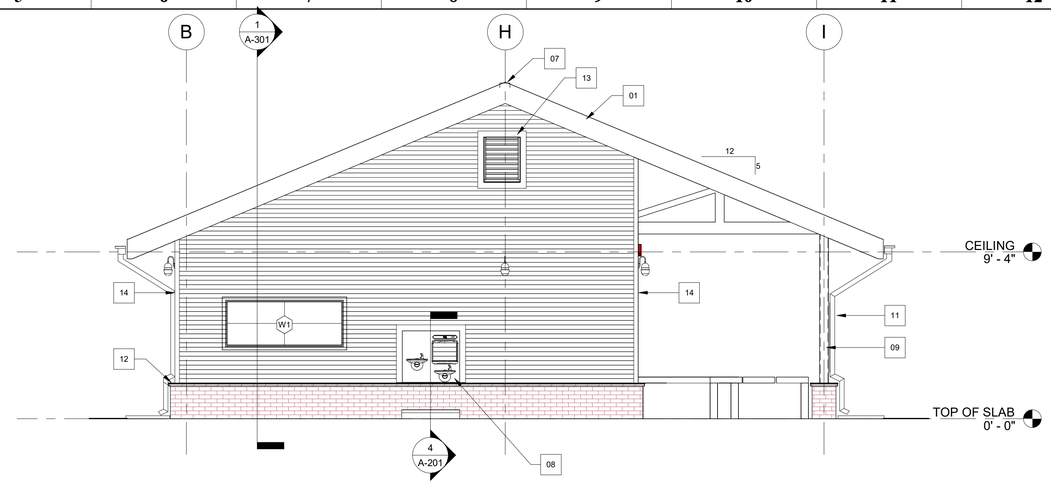

1 WEST ELEVATION
A-201 1/4" = 1'-0"

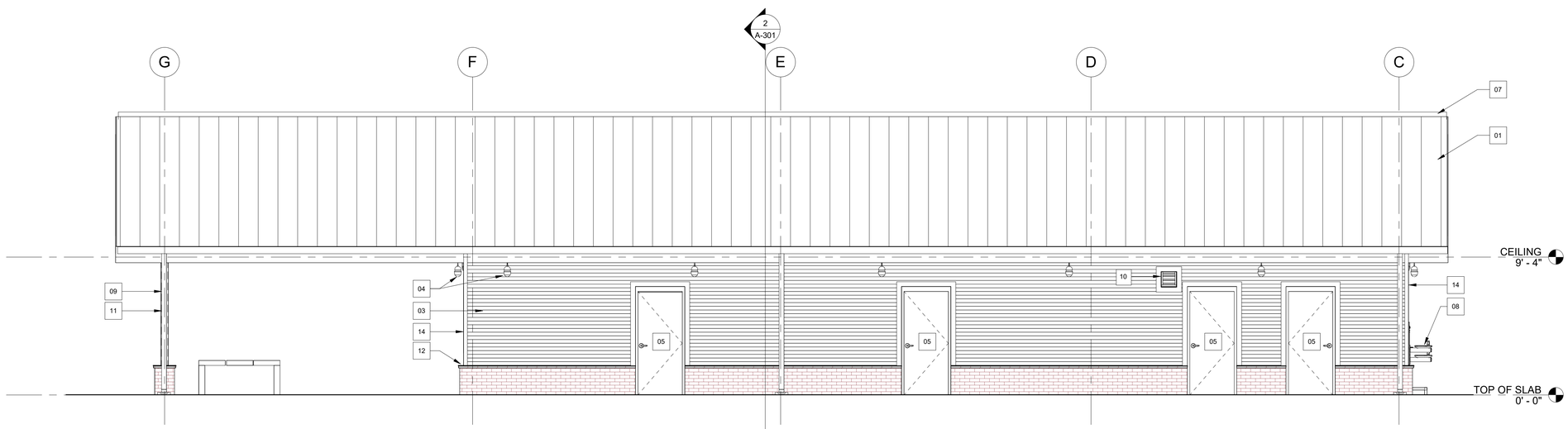

2 SOUTH ELEVATION
A-201 1/4" = 1'-0"

GENERAL NOTES

1. PROVIDE ACCESSIBLE SIGNAGE AT MEN'S AND WOMEN'S ROOM, SEE DETAIL A3/A-601.
2. PAINT ALL EXTERIOR SIDING, TRIM, EAVE, FASCIA AND STRUCTURAL STEEL. T&G SOFFIT DECKING TO BE FINISHED GRADE UNPAINTED WOOD. FINAL COLORS TO BE DETERMINED BY OWNER.
3. SEE DETAILS ON SHEET A-502 FOR SIDING DETAILS

ELEVATION KEYNOTES

01	STANDING SEAM METAL ROOF AND UNDERLAYMENT WITH TRIM AT EAVE AND RAKE.
02	PAINTED FIBER CEMENT FASCIA AND RAKE, TYPICAL.
03	PAINTED FIBER CEMENT LAP SIDING.
04	WALL MOUNTED LIGHT FIXTURE- SEE ELECTRICAL DRAWINGS.
05	HOLLOW METAL DOOR AND FRAME, PAINTED.
06	FIXED ALUM WINDOWS WITH OBSCURE GLASS.
07	PREFINISHED METAL ROOF VENT, TO MATCH ROOF COLOR.
08	PROVIDE DUAL HEIGHT DRINKING FOUNTAIN WITH BOTTLE FILLER.
09	STRUCTURAL STEEL WITH HIGH PERFORMANCE PAINTED FINISHED.
10	PREFINISHED METAL EXHAUST WALL LOUVER WITH INSECT SCREEN. 1'-0" x 1'-0"
11	PREFINISHED METAL DOWNSPOUT- TERMINATE AT CONCRETE SPLASHBLOCK AT PAVING.
12	4" NOMINAL BRICK VENEER W/ ROWLOCK COURSE AT TOP
13	PREFINISHED METAL EXHAUST WALL LOUVER WITH INSECT SCREEN. 2'-0" x 2'-6"
14	PREFINISHED FIBER CEMENT CORNER TRIM

MATERIAL COLOR LEGEND

A. BRICK/MORTAR	PLAMETTO BRICK COMPANY MODULAR RED WIRECUT MORTAR COLOR: HOLCIM FROSTY
B. METALROOF AND TRIM:	MBCI LOKSEAM, 24-GAUGE, 16" PANELS COLOR: SILVER METALLIC
C. STOREFRONT:	CLEAR ANDOIZED ALUMINUM/CLEAR GLASS
D. METAL DOORS AND FRAMES:	P-1- SHERWIN WILLIAMS SW 7072 ONLINE
E. COUNTER SHUTTERS:.	COLOR: STAINLESS STEEL
F. CEMENTITIOUS FACADE:	P-1- SHERWIN WILLIAMS SW 7072 ONLINE
G. STEEL LINTELS:	P-1- SHERWIN WILLIAMS SW 7072 ONLINE
H. TOILET PARTIITIONS:	ASI GLOBAL PARTITIONS, SOLID PLASTIC HDPE, FINI: PEBBLE GRAIN TEXTURE, COLOR: METALLIC SILVER #9511

PRIME
A Stratus Team Company
3715 NORTHSIDE PARKWAY NW
400 NORTHCREEK, SUITE 200
ATLANTA, GEORGIA 30327
404-425-7100

PROJECT:
DALTON PICKLEBALL COMPLEX
904 CIVIC DRIVE, DALTON, GA 30721

PREPARED FOR:
City of Dalton

REVISIONS

NO.	DATE	DESCRIPTION

SEAL
STATE OF GEORGIA
JASON MICHAEL GARCIA
CERTIFICATE NO. 038287
REGISTERED ARCHITECT
DATE: 08/09/2024

© 2024 PRIME ENGINEERING, INC. Scales, as stated hereon, are valid on the original drawing; the dimensions of which are 24 by 36 inches. These scales, noted hereon, are hereby changed by the ratio of the overall sheet dimensions of the print to corresponding dimensions of the original drawing. This drawing is the property of PRIME ENGINEERING, INCORPORATED and is not to be reproduced or copied in whole or in part. It is not to be used for any purpose and is not to be used on any other project. It is to be returned upon request.

DRAWING TITLE
BUILDING ELEVATIONS

DRAWING DATE	08/09/2024
DRAWING SCALE	As indicated
PROJECT NUMBER	2024-0283
DRAWING NUMBER	A-201
DRAWN BY	JL
DESIGNED BY	MP
CHECKED BY	JG

NOT ISSUED FOR CONSTRUCTION

Autodesk Docs://Dalton - Pickleball/Dalton-Pickleball Site 1.rvt

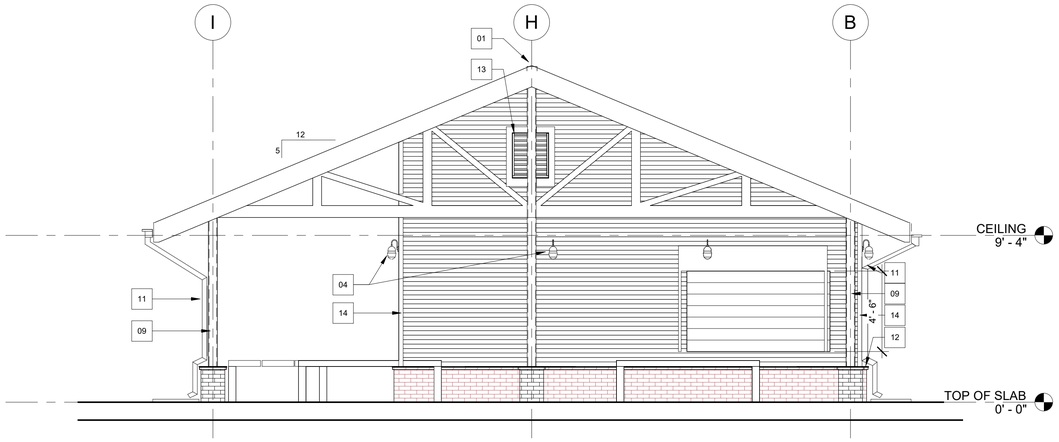

1 EAST ELEVATION
A-202 1/4" = 1'-0"

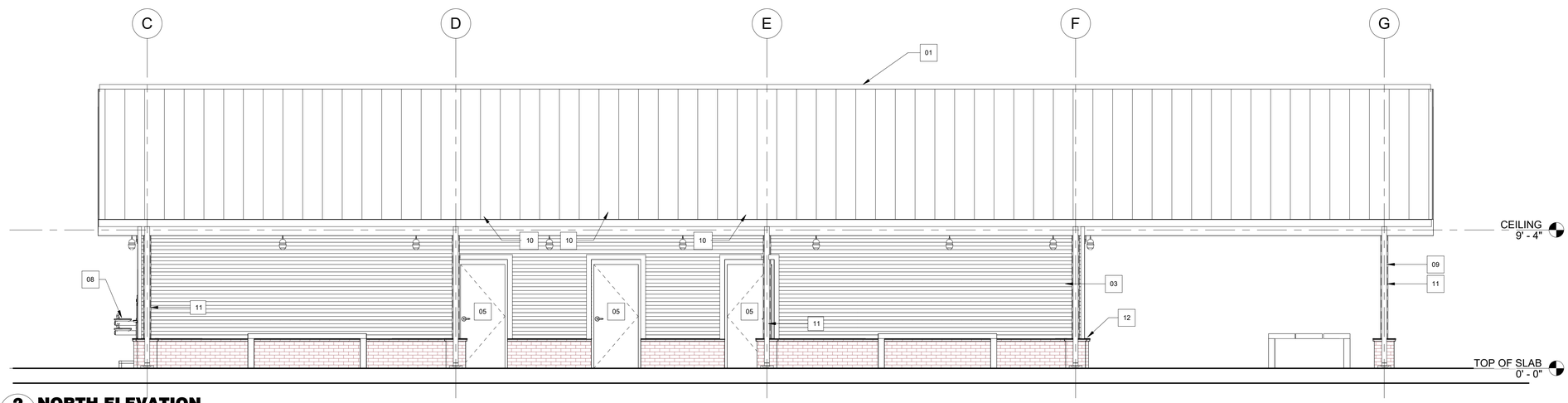

2 NORTH ELEVATION
A-202 1/4" = 1'-0"

GENERAL NOTES

1. PROVIDE ACCESSIBLE SIGNAGE AT MEN'S AND WOMEN'S ROOM, SEE DETAIL A3/A-601.
2. PAINT ALL EXTERIOR SIDING, TRIM, EAVE, FASCIA AND STRUCTURAL STEEL. T&G SOFFIT DECKING TO BE FINISHED GRADE UNPAINTED WOOD. FINAL COLORS TO BE DETERMINED BY OWNER.
3. SEE DETAILS ON SHEET A-502 FOR SIDING DETAILS

ELEVATION KEYNOTES

01	STANDING SEAM METAL ROOF AND UNDERLAYMENT WITH TRIM AT EAVE AND RAKE.
02	PAINTED FIBER CEMENT FASCIA AND RAKE, TYPICAL.
03	PAINTED FIBER CEMENT LAP SIDING.
04	WALL MOUNTED LIGHT FIXTURE- SEE ELECTRICAL DRAWINGS.
05	HOLLOW METAL DOOR AND FRAME, PAINTED.
06	FIXED ALUM WINDOWS WITH OBSCURE GLASS.
07	PREFINISHED METAL ROOF VENT, TO MATCH ROOF COLOR.
08	PROVIDE DUAL HEIGHT DRINKING FOUNTAIN WITH BOTTLE FILLER.
09	STRUCTURAL STEEL WITH HIGH PERFORMANCE PAINTED FINISHED.
10	PREFINISHED METAL EXHAUST WALL LOUVER WITH INSECT SCREEN. 1'-0" x 1'-0"
11	PREFINISHED METAL DOWNSPOUT- TERMINATE AT CONCRETE SPLASHBLOCK AT PAVING.
12	4" NOMINAL BRICK VENEER W/ ROWLOCK COURSE AT TOP
13	PREFINISHED METAL EXHAUST WALL LOUVER WITH INSECT SCREEN. 2'-0" x 2'-6"
14	PREFINISHED FIBER CEMENT CORNER TRIM

MATERIAL COLOR LEGEND

A. BRICK/MORTAR	PLAMETTO BRICK COMPANY MODULAR RED WIRECUT MORTAR COLOR: HOLCIM FROSTY
B. METALROOF AND TRIM:	MBCI LOKSEAM, 24-GAUGE, 16" PANELS COLOR: SILVER METALLIC
C. STOREFRONT:	CLEAR ANDOIZED ALUMINUM/CLEAR GLASS
D. METAL DOORS AND FRAMES:	P-1- SHERWIN WILLIAMS SW 7072 ONLINE
E. COUNTER SHUTTERS:.	COLOR: STAINLESS STEEL
F. CEMENTITIOUS FACADE:	P-1- SHERWIN WILLIAMS SW 7072 ONLINE
G. STEEL LINTELS:	P-1- SHERWIN WILLIAMS SW 7072 ONLINE
H. TOILET PARTIITIONS:	ASI GLOBAL PARTITIONS, SOLID PLASTIC HDPE, FINI: PEBBLE GRAIN TEXTURE, COLOR: METALLIC SILVER #9511

PRIME
A Stratus Team Company
3715 NORTHSIDE PARKWAY NW
400 NORTHCREEK, SUITE 200
ATLANTA, GEORGIA 30327
404-425-7100

PROJECT:
DALTON PICKLEBALL COMPLEX
904 CIVIC DRIVE, DALTON, GA 30721

PREPARED FOR:
City of Dalton

REVISIONS

NO.	DATE	DESCRIPTION

SEAL
STATE OF GEORGIA
JASON MICHAEL LEGGETT
CERTIFICATE NO. 036787
REGISTERED ARCHITECT
DATE: 08/09/2024

© 2024 PRIME ENGINEERING, INC. Scales, as stated hereon, are valid on the original drawing; the dimensions of which are 24 by 36 inches. These scales, noted hereon, are hereby changed by the ratio of the overall sheet dimensions of the print to corresponding dimensions of the original drawing. This drawing is the property of PRIME ENGINEERING, INCORPORATED and is not to be reproduced or copied in whole or in part. It is not to be used for the project and site specifically identified herein and is not to be used on any other project. It is to be returned upon request.

DRAWING TITLE
BUILDING ELEVATIONS

DRAWING DATE 08/09/2024	DRAWN BY JL	DESIGNED BY MP	CHECKED BY JG
DRAWING SCALE 1/4" = 1'-0"			
PROJECT NUMBER 2024-0283	DRAWING NUMBER A-202		

NOT ISSUED FOR CONSTRUCTION

Autodesk Docs://Dalton - Pickleball/Dalton-Pickleball Site 1.rvt

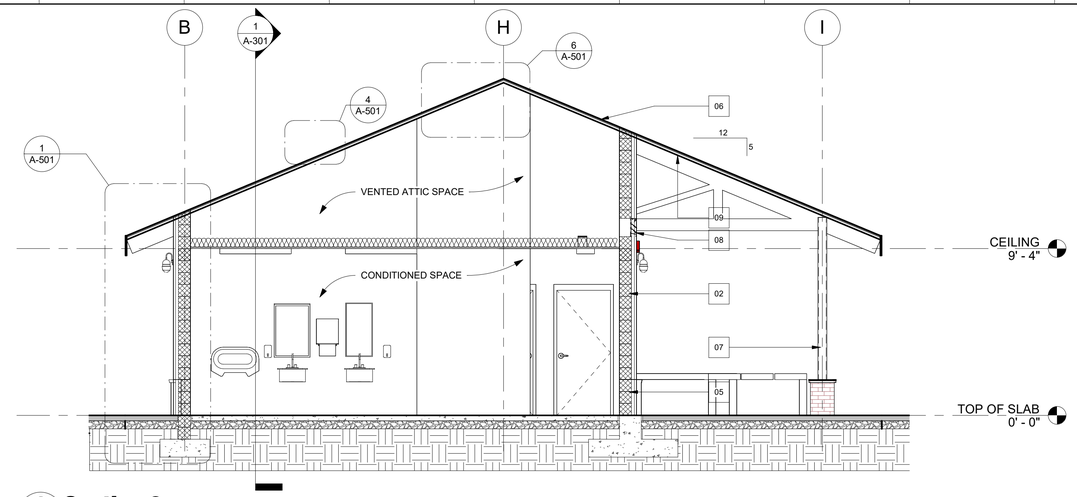

2 Section 2
A-301 1/4" = 1'-0"

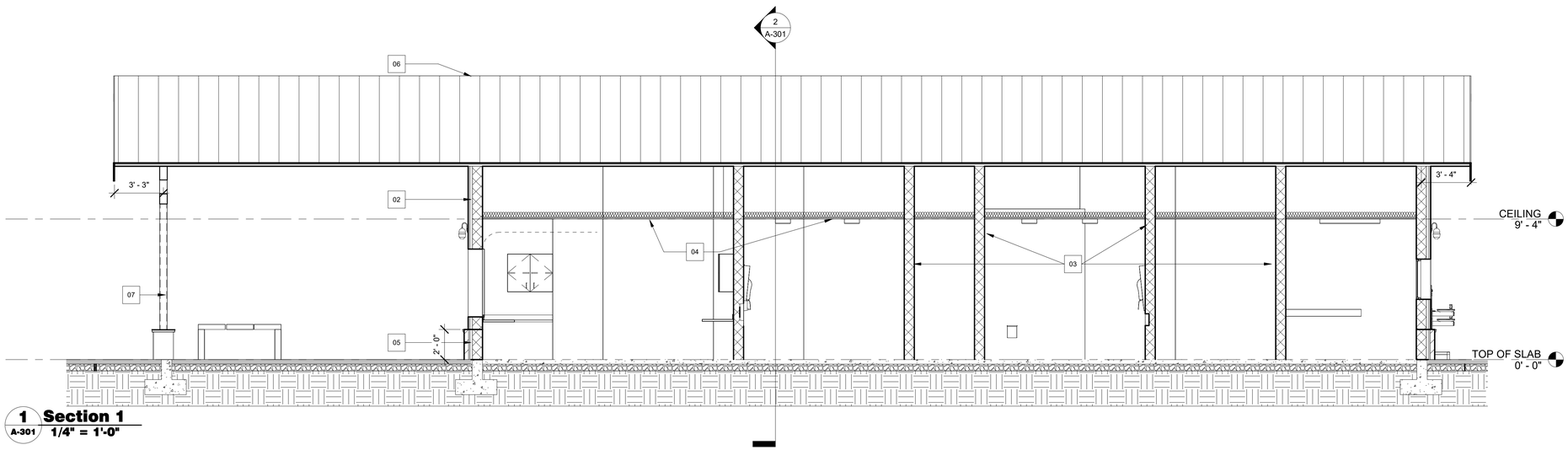

1 Section 1
A-301 1/4" = 1'-0"

GENERAL NOTES

1. PROVIDE ACCESSIBLE SIGNAGE AT MEN'S AND WOMEN'S ROOM, SEE DETAIL A3/A-601.
2. PAINT ALL EXTERIOR SIDING, TRIM, EAVE, FASCIA AND STRUCTURAL STEEL. T&G SOFFIT DECKING TO BE FINISHED GRADE UNPAINTED WOOD. FINAL COLORS TO BE DETERMINED BY OWNER.
3. SEE DETAILS ON SHEET A-502 FOR SIDING DETAILS

SECTION KEYNOTES

01	CONCRETE SLAB WITH VAPOR BARRIER AND COMPACTED GRAVEL.
02	EXTERIOR CMU WALL WITH FIBER CEMENT SIDING, RIGID INSULATION (R-9.5), AND WEATHER BARRIER. SEE STRUCTURAL DWGS AND WALL SECTIONS.
03	INTERIOR CMU PARTITION, SEE STRUCTURAL DWGS AND WALL SECTIONS.
04	BEADED FIBER CEMENT BOARD CEILING TO UNDERSIDE OF ROOF TRUSSES. PROVIDE FACED R-38 BATT INSULATION IN ATTIC SPACE.
05	EXTERIOR CMU WALL WITH BRICK SIDING, RIGID INSULATION (R-9.5), AND WEATHER BARRIER. SEE STRUCTURAL DWGS AND WALL SECTIONS.
06	STANDING SEAM METAL ROOF AND UNDERLAYMENT OVER ROOF SHEATHING.
07	STRUCTURAL STEEL COLUMN, PAINTED
08	PREFINISHED METAL EXHAUST WALL LOUVER W/ INSECT & BIRD SCREEN. 1'-0" x 1'-0"
09	FINISHED GRADE T&G WOOD DECKING, UNPAINTED, STAINED. COLOR TO BE SELECTED BY OWNER

PRIME
A Stratus Team Company
3715 NORTHSIDE PARKWAY NW
400 NORTHCREEK, SUITE 200
ATLANTA, GEORGIA 30327
404-425-7100

PROJECT:
DALTON PICKLEBALL COMPLEX
904 CIVIC DRIVE, DALTON, GA 30721

PREPARED FOR:
City of Dalton

REVISIONS

NO.	DATE	DESCRIPTION

SEAL
STATE OF GEORGIA
JASON MICHAEL PARKER
CERTIFICATE NO. PA002
REGISTERED ARCHITECT
DATE: 08/09/2024

© 2024 PRIME ENGINEERING, INC. Scales, as stated hereon, are valid on the original drawing; the dimensions of which are 24 by 36 inches. These scales, noted hereon, are hereby changed by the ratio of the overall sheet dimensions of the print to corresponding dimensions of the original drawing. This drawing is the property of PRIME ENGINEERING, INCORPORATED and is not to be reproduced or copied in whole or in part. It is only to be used for the project and site specifically identified herein and is not to be used on any other project. It is to be returned upon request.

DRAWING TITLE
BUILDING SECTIONS

DRAWING DATE	08/09/2024
DRAWN BY	JL
DRAWING SCALE	1/4" = 1'-0"
DESIGNED BY	MP
PROJECT NUMBER	2024-0283
CHECKED BY	JG
DRAWING NUMBER	A-301

NOT ISSUED FOR CONSTRUCTION

Autodesk Docs://Dalton - Pickleball/Dalton-Pickleball Site 1.rvt

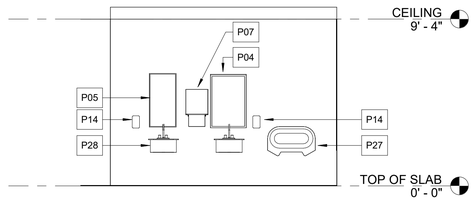

1 WOMENS RR WEST ELEV
A-401 1/4" = 1'-0"

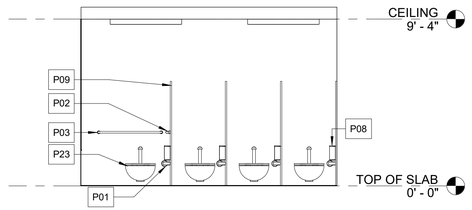

2 WOMENS RR EAST ELEV
A-401 1/4" = 1'-0"

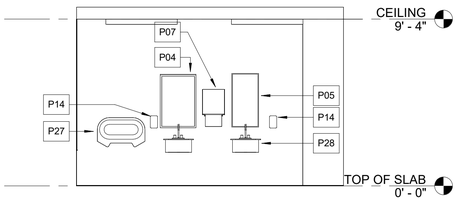

3 MENS RR EAST ELEV
A-401 1/4" = 1'-0"

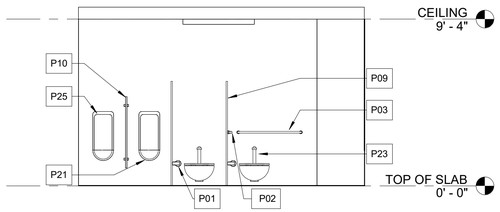

4 MENS RR WEST ELEV
A-401 1/4" = 1'-0"

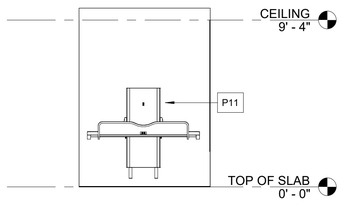

5 FAMILY RR EAST ELEV
A-401 1/4" = 1'-0"

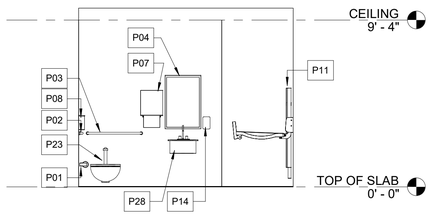

6 FAMILY RR NORTH ELEV
A-401 1/4" = 1'-0"

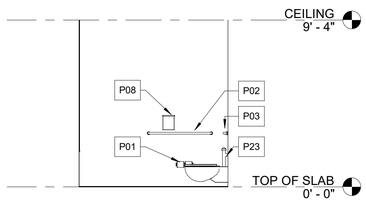

7 FAMILY RR WEST ELEV
A-401 1/4" = 1'-0"

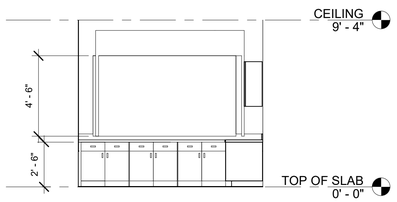

8 CONCESSION EAST ELEV
A-401 1/4" = 1'-0"

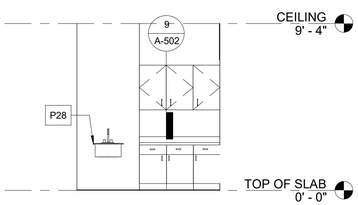

9 CONCESSION WEST ELEV
A-401 1/4" = 1'-0"

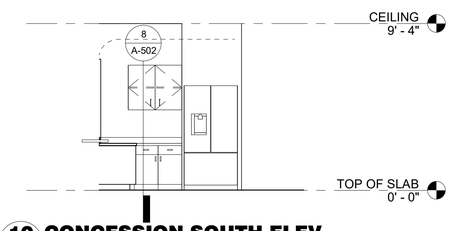

10 CONCESSION SOUTH ELEV
A-401 1/4" = 1'-0"

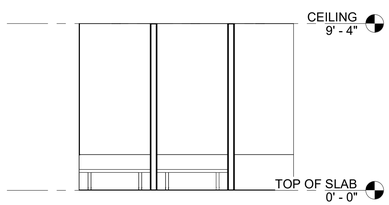

11 WN CHANGING RM WEST ELEV
A-401 1/4" = 1'-0"

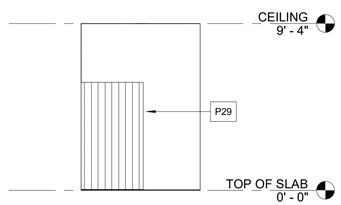

12 WN CHANGING RM NORTH ELEV
A-401 1/4" = 1'-0"

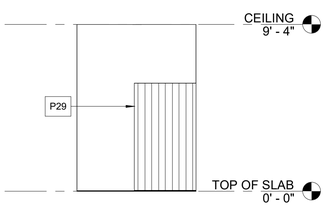

13 MN CHANGING RM NORTH ELEV
A-401 1/4" = 1'-0"

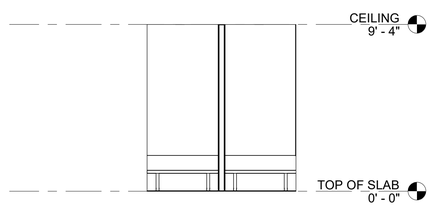

14 MN CHANGING RM EAST ELEV
A-401 1/4" = 1'-0"

TOILET ROOM ACCESSORY SCHEDULE

KEYNOTE	ITEM	MANUFACTURER	MODEL #
P01	TOILET PAPER DISPENSER	TORK MATIC	56744
P02	42" GRAB BAR	SANIGUARD OR EQUAL	GBS15-1142-Q
P03	36" GRAB BAR	SANIGAURD OR EQUAL	GBS15-1136-Q
P04	ADA COMPLIANT ANGLED MIRROR	BOBRICK	B-293 2436
P05	MIRROR	BOBRICK	B-165 2436
P06	MOP-HOLDER	BOBRICK	B-223
P07	SURFACE MOUNTED AUTOMATED PAPER TOWEL DISPENSER	TORK MATIC	59462A, BLACK
P08	SANITARY NAPKIN DISPOSAL	TOUGH GUY OR EQUAL	IECK9
P09	FLOOR MOUNTED OVERHEAD BRACED TOILET PARTITION	-	-
P10	URINAL SCREEN	-	-
P11	ADA COMPLIANT WALL MOUNTED ADULT CHANGING TABLE	-	IECK2
P12	ADA COMPLIANT WALL MOUNTED FOLDING SHOWER SEAT	-	B370634, STAINLESS STEEL
P13	18" VERTICAL GRAB BAR	SANIGUARD	GBS15-1118-Q
P14	SURFACE MOUNTED AUTOMATED SOAP DISPENSER	RUBBERMAID LUMECEL	1980928
P15	PAPER TOWEL DISPENSER AND WASTE RECEPTABLE	BOBRICK	B-43944
P16	WALL BUMPER	-	-
P17	STAINLESS STEEL SHELF	-	-
P21	URINAL	SEE PLUMBING	SEE PLUMBING
P22	WALL MOUNTED FLUSH VALVE TOILET	SEE PLUMBING	SEE PLUMBING
P23	WALL HUNG LAVATORY	SEE PLUMBING	SEE PLUMBING
P24	FLOOR DRAIN	SEE PLUMBING	SEE PLUMBING
P25	ADA ACCESSIBLE URINAL	SEE PLUMBING	SEE PLUMBING
P26	MOP & BROOM HOLDER SEE PLAN FOR LOCATION	-	-
P27	DIAPER CHANGING STATION MOUNTED 34" TO TOP OF WORK SURFACE	-	-
P28	WALL MOUNTED SINK	-	-
P29	ADA COMPLIANT SHOWER CURTAIN AND ROD	-	-
P30	ADA COMPLIANT ROLL IN SHOWER WALL MOUNTED FOLDING SHOWER SEAT, GRAB BARS, SHOWER AND CONTROL		

PRIME
A Stratus Team Company
3715 NORTHSIDE PARKWAY NW
400 NORTHCREEK, SUITE 200
ATLANTA, GEORGIA 30327
404-425-7100

PROJECT:
DALTON PICKLEBALL COMPLEX
904 CIVIC DRIVE, DALTON, GA 30721

PREPARED FOR:
City of Dalton

REVISIONS

NO.	DATE	DESCRIPTION

SEAL

STATE OF GEORGIA
JASON MICHAEL GARZA
CERTIFICATE NO. 025557
REGISTERED ARCHITECT

DATE: 08/09/2024

© 2024 PRIME ENGINEERING, INC. Scales, as stated hereon, are valid on the original drawing; the dimensions of which are 24 by 36 inches. These scales, noted hereon, are hereby changed by the ratio of the overall sheet dimensions of the print to corresponding dimensions of the original drawing. This drawing is the property of PRIME ENGINEERING, INCORPORATED and is not to be reproduced or copied in whole or in part. It is not to be used for other projects and specifically be identified herein and is not to be used on any other project. It is to be returned upon request.

DRAWING TITLE
INTERIOR ELEVATIONS

DRAWN BY	JL
DESIGNED BY	MP
CHECKED BY	JG
DRAWING DATE	08/09/2024
DRAWING SCALE	1/4" = 1'-0"
PROJECT NUMBER	2024-0283
DRAWING NUMBER	A-401

NOT ISSUED FOR CONSTRUCTION

Autodesk Docs://Dalton - Pickleball/Dalton-Pickleball Site 1.rvt

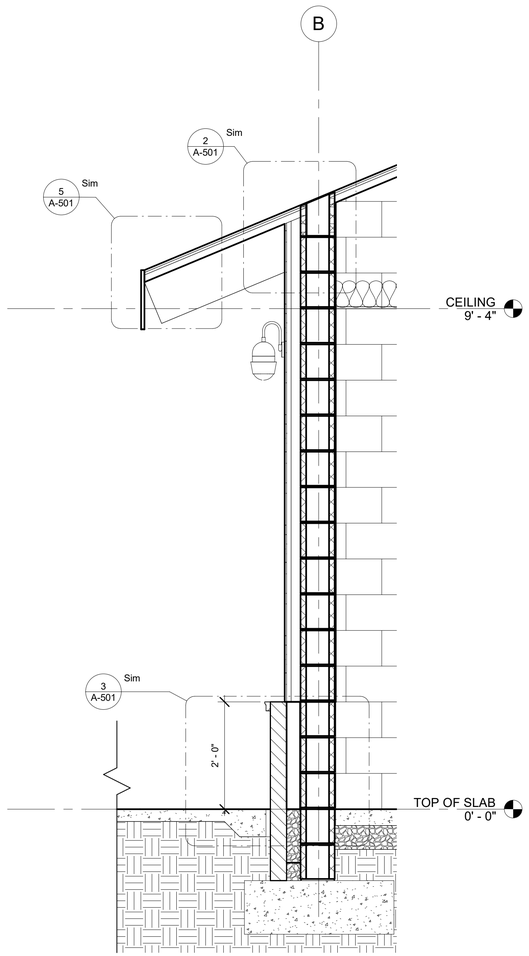

1 WALL SECTION 1
A-501 3/4" = 1'-0"

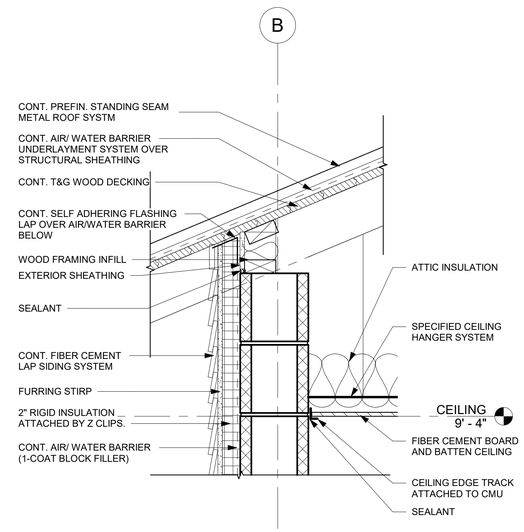

2 DETAIL- TOP OF WALL SECTION
A-501 1 1/2" = 1'-0"

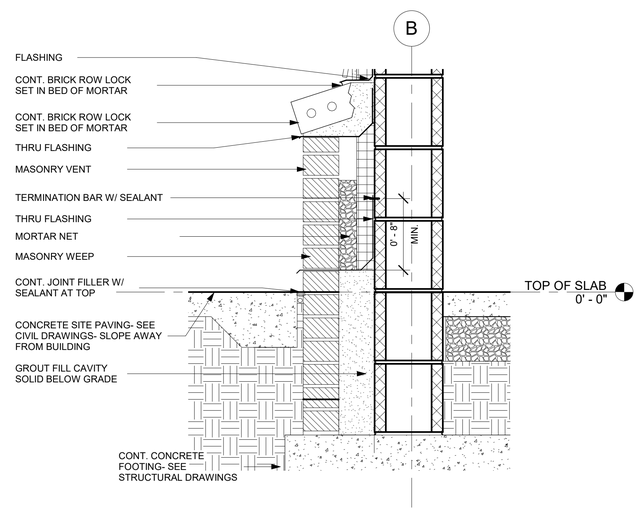

3 DETAIL- BASE OF WALL SECTION 1
A-501 1 1/2" = 1'-0"

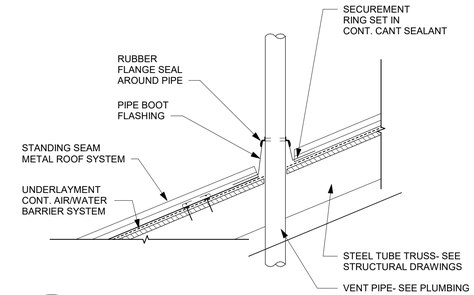

4 VENT DETAIL
A-501 1 1/2" = 1'-0"

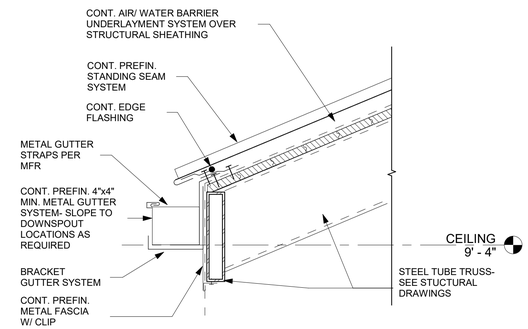

5 EXT. FACE OF FASICA AND GUTTER
A-501 1 1/2" = 1'-0"

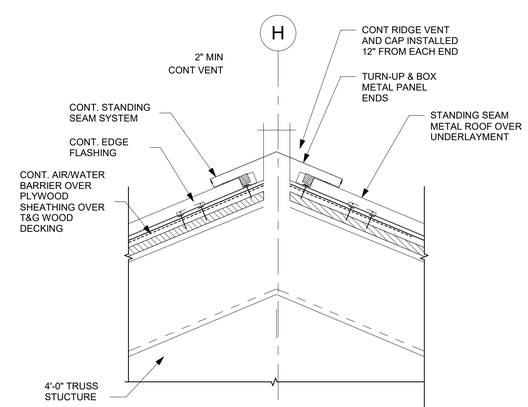

6 VENTED RIDGE DETAIL
A-501 1 1/2" = 1'-0"

PRIME
A Stratus Team Company
3715 NORTHSIDE PARKWAY NW
400 NORTHCREEK, SUITE 200
ATLANTA, GEORGIA 30327
404-425-7100

PROJECT:
DALTON PICKLEBALL COMPLEX
904 CIVIC DRIVE, DALTON, GA 30721

PREPARED FOR:
City of Dalton

REVISIONS

NO.	DATE	DESCRIPTION

SEAL
STATE OF GEORGIA — JASON MICHAEL GARCIA — CERTIFICATE NO. 035337 — REGISTERED ARCHITECT
DATE: 08/09/2024

© 2024 PRIME ENGINEERING, INC.
Scales, as stated hereon, are valid on the original drawing; the dimensions of which are 24 by 36 inches. These scales, noted hereon, are hereby changed by the ratio of the overall sheet dimensions of the print to corresponding dimensions of the original drawing. This drawing is the property of PRIME ENGINEERING, INCORPORATED and is not to be reproduced or copied in whole or in part. It is only to be used for the project and site specifically identified herein and is not to be used on any other project. It is to be returned upon request.

DRAWING TITLE
DETAILS

DRAWING DATE	08/09/2024
DRAWING SCALE	As indicated
PROJECT NUMBER	2024-0283
DRAWING NUMBER	A-501
DRAWN BY	JL
DESIGNED BY	MP
CHECKED BY	JG

NOT ISSUED FOR CONSTRUCTION

Autodesk Docs://Dalton - Pickleball/Dalton-Pickleball Site 1.rvt

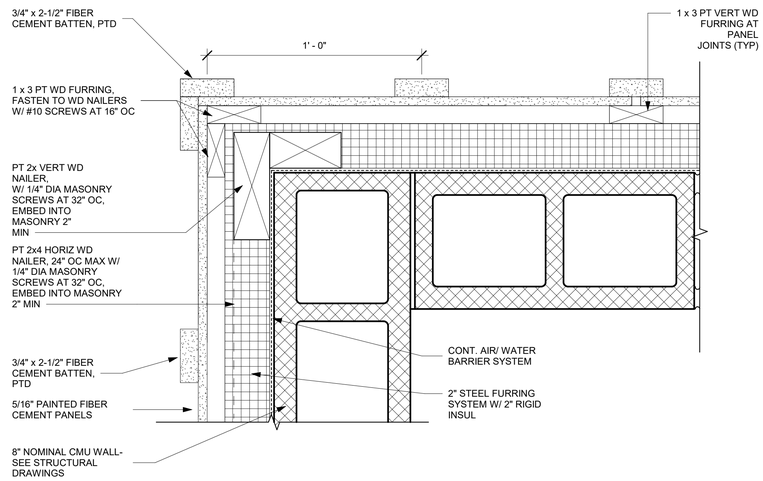

1 DETAIL -OUTSIDE CORNER
A-502 3" = 1'-0"

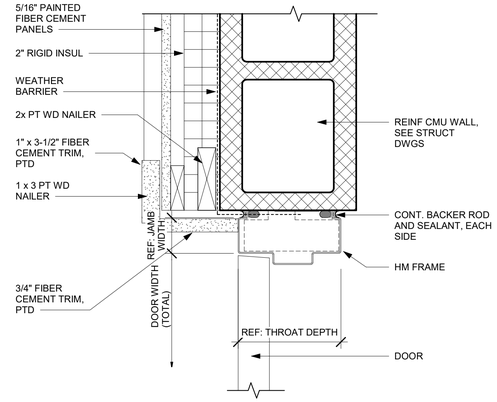

2 DOOR JAMB DETAIL - CMU
A-502 3" = 1'-0"

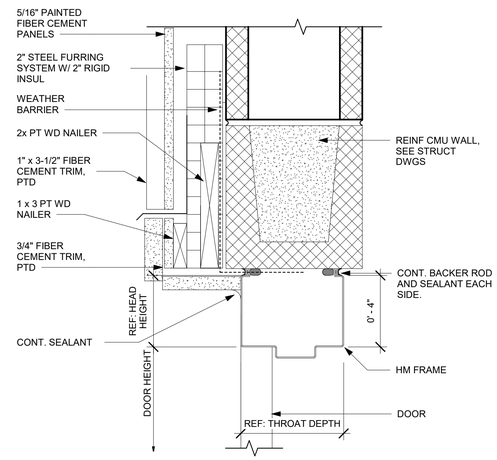

3 DOOR HEAD DETAIL - CMU
A-502 3" = 1'-0"

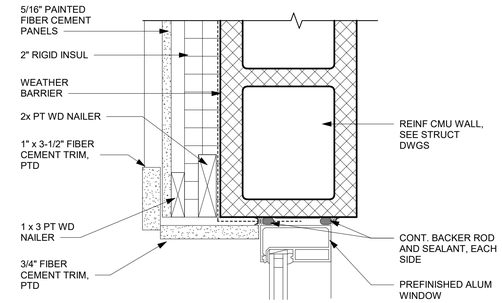

5 WNDW - JAMB DETAIL
A-502 3" = 1'-0"

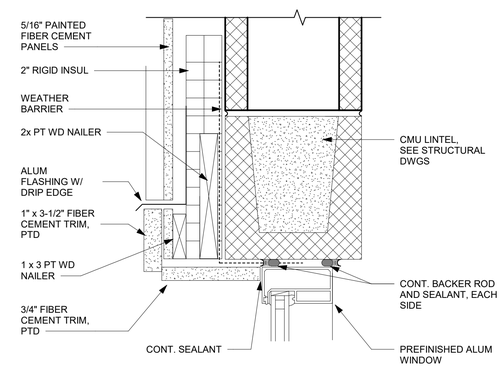

6 WNDW - HEAD DETAIL
A-502 3" = 1'-0"

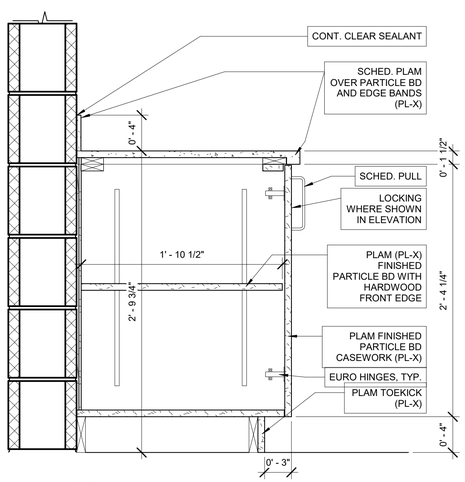

8 BASE CABINET WITH DOOR
A-502 1 1/2" = 1'-0"

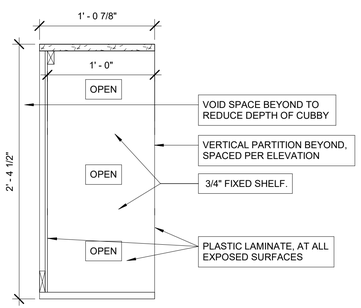

9 UPPER CUBBIES CABINET
A-502 1 1/2" = 1'-0"

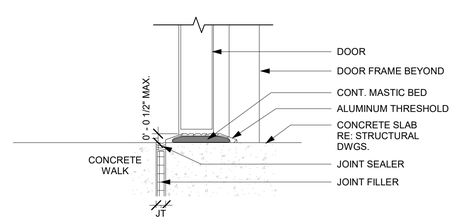

4 DOOR THRESHOLD DETAIL - EXT
A-502 3" = 1'-0"

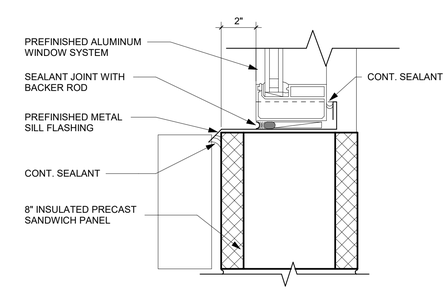

7 WNDW - SILL DETAIL
A-502 3" = 1'-0"

GENERAL NOTES

FIBER CEMENT DETAILS AND INSTALLATION SHALL BE PER MANUFACTURER'S RECOMMENDATIONS AND REQUIREMENTS FOR PROJECT CONDITIONS, SYSTEM INTEGRITY AND MANUFACTURER'S WARRANTY REQUIREMENTS.

PRIME
A Stratus Team Company
3715 NORTHSIDE PARKWAY NW
400 NORTHCREEK, SUITE 200
ATLANTA, GEORGIA 30327
404-425-7100

PROJECT:
DALTON PICKLEBALL COMPLEX
904 CIVIC DRIVE, DALTON, GA 30721

PREPARED FOR:
City of Dalton

REVISIONS

NO.	DATE	DESCRIPTION

SEAL: STATE OF GEORGIA — JASON MICHAEL LEE — GA RA 024 — REGISTERED ARCHITECT — CERTIFICATE ON ISSUE

DATE: 08/09/2024

© 2024 PRIME ENGINEERING, INC. Scales, as stated hereon, are valid on the original drawing; the dimensions of which are 24 by 36 inches. These scales, noted hereon, are hereby changed by the ratio of the overall sheet dimensions of the print to corresponding dimensions of the original drawing. This drawing is the property of PRIME ENGINEERING, INCORPORATED and is not to be reproduced or copied in whole or in part. It is not to be used for other projects and is specifically identified herein and is not to be used on any other project. It is to be returned upon request.

DRAWING TITLE: **DETAILS**

DRAWING DATE	08/09/2024
DRAWING SCALE	As indicated
PROJECT NUMBER	2024-0283
DRAWING NUMBER	A-502
DRAWN BY	JL
DESIGNED BY	MP
CHECKED BY	JG

NOT ISSUED FOR CONSTRUCTION

Autodesk Docs://Dalton - Pickleball/Dalton-Pickleball Site 1.rvt

DOOR SCHEDULE

DOOR NO.	DOOR SIZE WIDTH	DOOR SIZE HEIGHT	DOOR THK	DOOR MAT'L	DOOR FINISH	FRAME MATERIAL	FRAME FINISH	FRAME TYPE	FRAME DETAIL HEAD	FRAME DETAIL JAMB	FRAME DETAIL SILL	HARDWARE SET	COMMENTS
1	3' - 0"	7' - 0"	0' - 1 3/4"	H.M.	PAINTED	H.M.	PAINTED	F1	3/A502	2/A502	5/A502		COMMENT 1
2	3' - 0"	7' - 0"	0' - 1 3/4"	H.M.	PAINTED	H.M.	PAINTED	F1	3/A502	2/A502	5/A502		COMMENT 1
3	3' - 0"	7' - 0"	0' - 1 3/4"	H.M.	PAINTED	H.M.	PAINTED	F1	3/A502	2/A502	5/A502		COMMENT 1
4	3' - 0"	7' - 0"	0' - 1 3/4"	H.M.	PAINTED	H.M.	PAINTED	F1	3/A502	2/A502	5/A502		COMMENT 1
5	8' - 0"	4' - 6"	0' - 1 1/2"	ALUM	PREFIN.	H.M.	PREFIN.	D3	3/A502	2/A502			
6	3' - 0"	7' - 0"	0' - 1 3/4"	H.M.	PAINTED	H.M.	PAINTED	F1	3/A502	2/A502	5/A502		COMMENT 1
7	3' - 0"	7' - 0"	0' - 1 3/4"	H.M.	PAINTED	H.M.	PAINTED	F1	3/A502	2/A502	5/A502		COMMENT 1
8	3' - 0"	7' - 0"	0' - 1 3/4"	H.M.	PAINTED	H.M.	PAINTED	F1	3/A502	2/A502	5/A502		COMMENT 1
9	3' - 0"	7' - 0"	0' - 1 3/4"	H.M.	PAINTED	H.M.	PAINTED	F1	3/A502	2/A502			
10	3' - 0"	7' - 0"	0' - 1 3/4"	H.M.	PAINTED	H.M.	PAINTED	F1	3/A502	2/A502			
11	3' - 0"	7' - 0"	0' - 1 3/4"	H.M.	PAINTED	H.M.	PAINTED	F1	3/A502	2/A502			
12	3' - 0"	7' - 0"	0' - 1 3/4"	H.M.	PAINTED	H.M.	PAINTED	F1	3/A502	2/A502			

DOOR SCHEDULE COMMENTS

COMMENT 1- REF. DETAIL 1 BELOW; DOOR FRAME AND CMU BLOCK TO BE PREPPED FOR ACCESS CONTROL SYSTEM, BY OWNER

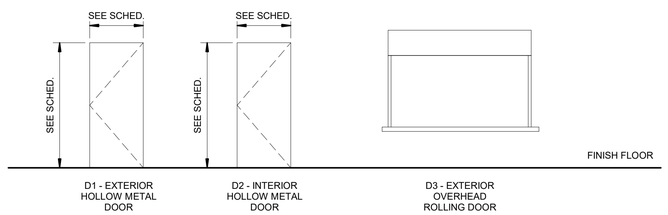

DOOR TYPES
1/4" = 1'-0"

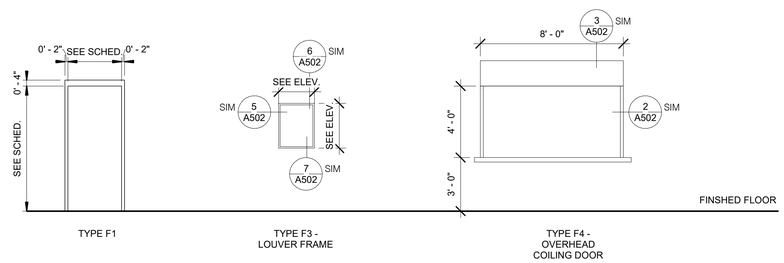

FRAME TYPES
1/4" = 1'-0"

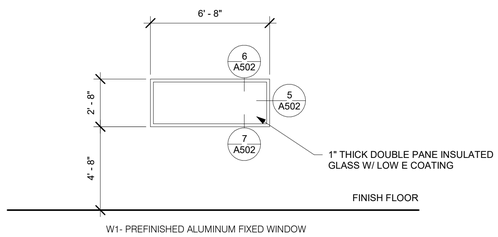

WINDOW TYPES
1/4" = 1'-0"

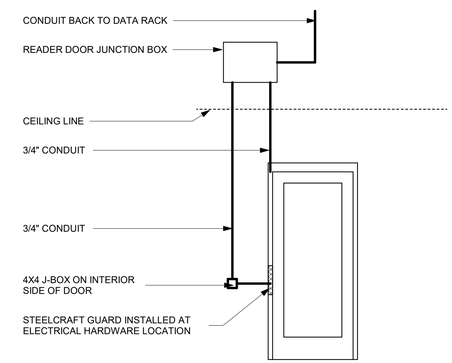

DOOR FRAME PREP FOR ACCESS DOOR CONTACT
4" OF UNFILLED SPACE IN DOOR FRAME

RECESSED SINGLE GANGE BOX WITH 3/4" CONDUIT STUBBED ABOVE CEILING LINE ON SECURE SIDE OF DOOR

1 / A-601 ACCESS CONTROL DETAIL
3/8" = 1'-0"

PRIME
A Stratus Team Company
3715 NORTHSIDE PARKWAY NW
400 NORTHCREEK, SUITE 200
ATLANTA, GEORGIA 30327
404-425-7100

PROJECT:
DALTON PICKLEBALL COMPLEX
904 CIVIC DRIVE, DALTON, GA 30721

PREPARED FOR:
City of Dalton

REVISIONS

NO.	DATE	DESCRIPTION

SEAL
STATE OF GEORGIA
JASON MICHAEL LEE
CERTIFICATE NO. 035337
REGISTERED ARCHITECT
DATE: 08/09/2024

© 2024 PRIME ENGINEERING, INC. Scales, as stated hereon, are valid on the original drawing; the dimensions of which are 24 by 36 inches. These scales, noted hereon, are hereby changed by the ratio of the overall sheet dimensions of the print to corresponding dimensions of the original drawing. This drawing is the property of PRIME ENGINEERING, INCORPORATED and is not to be reproduced or copied in whole or in part. It is only to be used for the project and for specifications identified herein and is not to be used on any other project. It is to be returned upon request.

DRAWING TITLE
SCHEDULES

DRAWING DATE 08/09/2024	DRAWN BY JL
DRAWING SCALE As indicated	DESIGNED BY MP
PROJECT NUMBER 2024-0283	CHECKED BY JG
DRAWING NUMBER A-601	

NOT ISSUED FOR CONSTRUCTION

Autodesk Docs://Dalton - Pickleball/Dalton-Pickleball Site 1.rvt

DESIGN NOTES

1. STRUCTURAL DESIGN IS BASED ON THE FOLLOWING CODES AND STANDARDS:
   A. GEORGIA STATE MINIMUM STANDARD BUILDING CODE (IBC 2018 WITH AMENDMENTS)
   B. ASCE 7-16 "MINIMUM DESIGN LOADS AND ASSOCIATED CRITERIA FOR BUILDINGS AND OTHER STRUCTURES"

2. LOADS AND DESIGN CRITERIA

A. RISK CATEGORY	II
B. LIVE LOADS	
SLAB-ON-GRADE	150 PSF
ROOF	20 PSF
C. SNOW LOADS	
GROUND SNOW LOAD, Pg	10 PSF
D. WIND LOADS	
ULTIMATE DESIGN WIND SPEED	105 MPH
NOMINAL DESIGN WIND SPEED	82 MPH
WIND EXPOSURE CATEGORY	C
INTERNAL PRESSURE COEFFICIENT, GCpi	±0.18
WIND BASE SHEAR (1.0W)	20 KIPS

COMPONENTS AND CLADDING WIND PRESSURES:

WALL PRESSURES

ZONE	TRIB. = 1-100 SF		TRIB. ≥ 100 SF	
4	+29	-32	+26	-28
5	+29	-39	+26	-32

ROOF PRESSURES

ZONE	TRIB. = 1-100 SF	TRIB. ≥ 100 SF
ALL	+16	+16
1'	-27	-18
1	-47	-37
2	-61	-48
3	-84	-58

ROOF OVERHANG PRESSURES

ZONE	TRIB. = 1-100 SF	TRIB. ≥ 100 SF
2	-61	-44
3	-84	-53

COMPONENTS AND CLADDING NOTES:
1. WIND PRESSURES GIVEN ARE ULTIMATE (1.0W).
2. WIND ZONES ARE BASED ON ASCE 7-16
3. PRESSURES ARE TABULATED FOR SELECTED TRIBUTARY AREA RANGES INDICATED.
4. POSITIVE VALUES INDICATE PRESSURE INTO THE WALL OR ROOF SURFACE. NEGATIVE VALUES INDICATE SUCTION. VALUES GIVEN ARE IN PSF.
5. SELECT COMPONENTS AND CLADDING MATERIALS AND FASTENERS TO MEET WIND PRESSURES FOR TRIBUTARY AREAS PROVIDED, OR RETAIN A PROFESSIONAL ENGINEER TO CALCULATE MORE EXACT PRESSURES FOR ACTUAL TRIBUTARY AREAS.

E. SEISMIC DESIGN DATA

MAPPED SPECTRAL RESPONSE ACCEL, S/S	0.522 (g)
MAPPED SPECTRAL RESPONSE ACCEL, S/1	0.123 (g)
DESIGN SPECTRAL RESPONSE ACCEL, S/DS	0.449 (g)
DESIGN SPECTRAL RESPONSE ACCEL, S/D1	0.123 (g)
SEISMIC IMPORTANCE FACTOR, I/E	1.0
SITE CLASS	C
SEISMIC DESIGN CATEGORY	C
SEISMIC FORCE RESISTING SYSTEM (ADDITION):	ORDINARY REINFORCED MASONRY SHEARWALLS
RESPONSE MODIFICATION FACTOR	2.0
SEISMIC RESPONSE COEFFICIENT, CS	0.225
SEISMIC BASE SHEAR (1.0E)	35 KIPS
ANALYSIS PROCEDURE:	EQUIVALENT LATERAL FORCE

GENERAL STRUCTURAL NOTES

1. THE CONTRACTOR MUST VERIFY ALL DIMENSIONS PRIOR TO CONSTRUCTION. COORDINATE STRUCTURAL DRAWINGS WITH ARCHITECTURAL, MECHANICAL, ELECTRICAL, PLUMBING AND CIVIL. NOTIFY THE STRUCTURAL ENGINEER OF RECORD OF ANY DISCREPANCIES OR INCONSISTENCIES.
2. THESE DRAWINGS MUST BE USED TOGETHER WITH THE PROJECT SPECIFICATIONS.
3. CONTRACTOR MUST VERIFY EXISTING CONDITIONS INCLUDING GRADES, UTILITIES, AND HIDDEN CONDITIONS AND COORDINATE THESE CONDITIONS WITH THE CONTRACT DOCUMENTS. NOTIFY THE OWNER OF EXISTING CONDITIONS THAT ARE NOT AS SHOWN.
4. THE STRUCTURAL DRAWINGS REPRESENT THE COMPLETED STRUCTURE. MEANS AND METHODS OF CONSTRUCTION ARE THE SOLE RESPONSIBILITY OF THE CONTRACTOR, INCLUDING CONSTRUCTION TECHNIQUES, SEQUENCES, PROCEDURES, AND ALL TEMPORARY SUPPORTS AND BRACING. DESIGN, ADEQUACY, AND SAFETY OF TEMPORARY ERECTION SUUPORTS AND BRACING IS THE SOLE RESPONSIBILITY OF CONTRACTOR. CONTRACTOR IS RESPONSIBLE FOR COMPLYING WITH OSHA SAFETY REGULATIONS.
5. THE CONTRACTOR MUST PROVIDE ALL MEASURES NECESSARY TO PROTECT STRUCTURAL ELEMENTS AND ADJACENT CONSTRUCTION.
6. DETAILS AND SECTIONS INDICATED ALSO APPLY TO REPEATED AND SIMILAR CONDITIONS THROUGHOUT THE PROJECT, UNLESS OTHERWISE NOTED.
7. DO NOT SCALE DRAWINGS. FOLLOW DIMENSIONS ON PLANS.
8. COORDINATE AND VERIFY FLOOR, ROOF AND WALL OPENING SIZES AND LOCATIONS WITH ARCHITECTURAL, MECHANICAL, PLUMBING AND ELECTRICAL DRAWINGS. NOT ALL OPENINGS ARE SHOWN ON THE STRUCTURAL DRAWINGS.
9. THE PROJECT REQUIRES THIRD-PARTY SPECIAL INSPECTIONS. REFER TO THE "STATEMENT AND SCHEDULE OF SPECIAL INSPECTIONS" FOR REQUIREMENTS.

FOUNDATION NOTES

1. FOUNDATIONS HAVE BEEN DESIGNED IN ACCORDANCE WITH THE GEOTECHNICAL REPORT PREPARED BY GEOHYDRO ENGINEERS, DATED FEBRUARY 22, 2022 (GEO-HYDRO PROJECT NUMBER 211941.20). THE REPORT IS INCLUDED WITH THE PROJECT SPECIFICATIONS.
2. FOUNDATIONS HAVE BEEN DESIGNED TO BEAR ON SUBGRADE WITH AN ALLOWABLE SOIL BEARING PRESSURE OF 2500 PSF.
3. THE SPECIAL INSPECTOR OR PROJECT GEOTECHNICAL ENGINEER MUST INSPECT AND APPROVE FOUNDATION SUBGRADES PRIOR TO CONCRETE PLACEMENT. UNDERCUT ANY UNACCEPTABLE AREAS IDENTIFIED BY THE SPECIAL INSPECTOR, AND BACKFILL WITH #57 STONE.
4. GEOTECHNICAL REPORT RECOMMENDS HOLDING AN ALLOWANCE FOR FOUNDATION SUBGRADE UNDERCUT/BACKFILL. CONTRACTOR'S BID MUST ACCOUNT FOR THIS WORK.
5. "DRAINAGE COURSE" GRANULAR LAYER BENEATH SLAB-ON-GRADE IS #57 STONE OR OTHER APPROVED OPEN-GRADED GRANULAR MATERIAL.

CONCRETE NOTES

1. CONCRETE WORK MUST CONFORM TO THE REQUIREMENTS OF ACI 318 "BUILDING CODE REQUIREMENTS FOR STRUCTURAL CONCRETE", AND ACI 301, "SPECIFICATIONS FOR STRUCTURAL CONCRETE FOR BUILDINGS."
2. SUBMIT MIX DESIGN TO A/E FOR REVIEW. CONCRETE IS NORMAL WEIGHT. MIX DESIGN PROPERTIES MUST BE:

ELEMENT	MIN f'c	MAX W/C	AIR
FOOTINGS	3000 PSI	0.50	AIR-ENTRAINED
COLUMN PEDESTALS AND WRAPS	4500 PSI	0.45	AIR-ENTRAINED
INTERIOR RESTROOM SLAB-ON-GRADE	4500 PSI	0.45	NON-AIR
CONCRETE PAVING		(SEE CIVIL DRAWINGS)	

3. REINFORCING STEEL MUST BE ASTM A615, GRADE 60, DEFORMED BARS. WELDED WIRE FABRIC MUST BE ASTM A1064, SHEET-TYPE.
4. AGGREGATE FOR NORMAL WEIGHT CONCRETE MUST CONFORM TO ALL REQUIREMENTS AND TESTS OF ASTM C33 AND THE PROJECT SPECIFICATIONS, INCLUDING ALKALI-SILICA REACTIVITY LIMITATIONS AND TESTING.
5. TIE ALL REINFORCING STEEL AND EMBEDDED ITEMS SECURELY IN PLACE PRIOR TO PLACING CONCRETE. PROVIDE SUFFICIENT SUPPORTS TO MAINTAIN THE POSITION OF REINFORCEMENT WITHIN SPECIFIED TOLERANCES DURING ALL CONSTRUCTION ACTIVITIES.
6. SPREAD OR OFFSET REINFORCING STEEL AS REQUIRED TO SUIT EMBEDDED ITEMS OR UTILITY PENETRATIONS. DO NOT CUT REINFORCING STEEL.
7. DO NOT WELD OR TACK WELD REINFORCING STEEL.
8. PROVIDE CONTINUOUS REINFORCEMENT UNLESS OTHERWISE NOTED. LAP SPLICE REINFORCING ONLY AS SHOWN OR APPROVED ON SHOP DRAWINGS. USE CLASS "B" TENSION LAP SPLICES CONFORMING WITH ACI 318 UNLESS NOTED OTHERWISE.
9. REINFORCING STEEL MUST HAVE THE FOLLOWING CONCRETE COVER, UNLESS OTHERWISE NOTED:

CONCRETE CAST AGAINST EARTH	3"
CONCRETE EXPOSED TO EARTH OR WEATHER:	
#6 BARS AND LARGER	2"
#5 BARS AND SMALLER	1 1/2"
CONCRETE NOT EXPOSED TO EARTH OR WEATHER	
SLABS AND WALLS	3/4"
BEAMS (STIRRUPS) AND PEDESTALS (TIES)	1 1/2"

MASONRY NOTES

1. MASONRY WORK MUST CONFORM TO THE REQUIREMENTS OF TMS 402-16 "BUILDING CODE REQUIREMENTS FOR MASONRY STRUCTURES" AND TMS 602-16 "SPECIFICATION FOR MASONRY STRUCTURES".
2. MASONRY MUST BE RUNNING BOND CONSTRUCTION.
3. MASONRY MATERIAL PROPERTIES MUST BE:

CONCRETE MASONRY UNITS	ASTM C90, LIGHTWEIGHT
MORTAR	ASTM C270 TYPE S, AIR-ENTRAINED
GROUT	ASTM C476, AIR-ENTRAINED
MASONRY STRENGTH	f'm = 2000 PSI
MINIMUM MORTAR COMPRESSIVE STRENGTH	f'c = 2000 PSI
MINIMUM GROUT COMPRESSIVE STRENGTH	f'c = 2000 PSI

4. REINFORCEMENT MUST CONFORM WITH ASTM A615, GRADE 60. USE BAR POSITIONERS TO HOLD BARS IN PLACE DURING CONSTRUCTION AND GROUTING. LOCATE MASONRY REINFORCING BARS IN MIDDLE OF WALL UNLESS NOTED OTHERWISE.
5. LAP SPLICE REINFORCING WHERE REQUIRED TO CONSTRUCT MASONRY. LAP SPLICE LENGTHS ARE 2'-6" FOR #4; 3'-0" FOR #5.
6. HORIZONTAL JOINT REINFORCEMENT MUST CONFORM WITH ASTM A951, HOT-DIP GALVANIZED, LADDER-TYPE, 9 GAGE SIZE. PROVIDE HORIZONTAL JOINT REINFORCEMENT THROUGHOUT EXTERIOR WALLS AT 16" OC VERTICALLY AND 8" ABOVE TOP OF FOOTINGS. PROVIDE MINIMUM 3/4" CLEAR TO OUTER FACE OF MASONRY.
7. GROUT SOLID ALL BELOW-GRADE MASONRY CELLS AND WALL CAVITIES.
8. DO NOT INTERRUPT BOND BEAMS AT TOP OF WALL. TERMINATE MASONRY CONTROL JOINTS AT BOTTOM OF BOND BEAMS.
9. MAXIMUM GROUT POUR HEIGHT IS 5'-4".

STRUCTURAL STEEL NOTES

1. FABRICATION AND ERECTION OF STRUCTURAL STEEL AND CONNECTIONS MUST BE IN ACCORDANCE WITH AISC 360 "SPECIFICATION OF STRUCTURAL STEEL BUILDINGS" AND AISC 303 "CODE OF STANDARD PRACTICE FOR BUILDING AND BRIDGES".
2. STRUCTURAL STEEL MUST CONFORM TO THE FOLLOWING:

A. PLATES, ANGLES	ASTM A36, Fy = 36 KSI
B. HSS (HOLLOW STRUCTURAL SECTIONS)	ASTM 500, GRADE C (50 KSI)
C. HIGH-STRENGTH BOLTS	ASTM F3125, GRADE A325N
D. ANCHOR BOLTS	ASTM F1554, GRADE 36

3. WELDING MUST CONFORM TO AMERICAN WELDING SOCIETY "STRUCTURAL WELDING CODE" LATEST EDITION, AWS D1.1. WELDING ELECTRODES MUST CONFORM TO E70XX.
4. STEEL ELEMENTS PERMANENTLY EXPOSED TO VIEW ARE ARCHITECTURALLY EXPOSED STRUCTURAL STEEL (AESS). SEE THE SPECIFICATIONS FOR REQUIREMENTS.
5. SHOP-PRIME STRUCTURAL STEEL UNLESS NOTED OTHERWISE. TOUCH-UP ALL FIELD WELDS WITH TWO COATS OF PRIMER. SEE ARCH DWGS FOR FINISH PAINTING REQUIREMENTS.
6. PAINT ALL STEEL BELOW GRADE WITH TWO COATS OF COAL TAR EPOXY PAINT.
7. HOT-DIP GALVANIZE STEEL WHERE INDICATED ON DRAWINGS.

STRUCTURAL WOOD NOTES

1. DESIGN, DETAILING, FABRICATION AND ERECTION OF STRUCTURAL WOOD FRAMING MUST COMPLY WITH AMERICAN WOOD COUNCIL NATIONAL DESIGN SPECIFICATION (NDS) FOR WOOD CONSTRUCTION AND SUPPLEMENT, 2018 EDITION.
2. STRUCTURAL DIMENSION LUMBER FRAMING MEMBERS MUST COMPLY WITH AMERICAN SOFTWOOD LUMBER STANDARD PS 20. DESIGN IS BASED ON THE FOLLOWING PROPERTIES:
   A. SOUTHERN PINE PER AGENCY CERTIFIED BY ALSC.
   B. MINIMUM NO 2 GRADE
   C. SURFACE DRY AT 19 PERCENT MAXIMUM MOISTURE CONTENT
3. TONGUE-AND-GROOVE STRUCTURAL DIMENSION LUMBER DECKING MEMBERS MUST BE PRESERVATIVE-TREATED IN ACCORDANCE WITH THE SPECIFICATIONS, AND COMPLY WITH AMERICAN SOFTWOOD LUMBER STANDARD PS 20 AND THE FOLLOWING:

A. NOMINAL SIZE	2x6
B. LAYUP TYPE	CONTROLLED RANDOM

4. CONTRACTOR MAY SUBMIT FOR APPROVAL ALTERNATE WOOD SPECIES/GRADES OF EQUAL OR BETTER STRUCTURAL PERFORMANCE.
5. OVERLAY ROOF SHEATHING FUNCTIONS AS A DIAPHRAGM. SHEATHING MUST BE 15/32" PLYWOOD, BE PRESERVATIVE-TREATED IN ACCORDANCE WITHH THE SPECIFICATIONS, AND MEET AMERICAN SOFTWOOD LUMBER STANDARD PS1, EXTERIOR EXPOSURE.
6. INSTALL SHEATHING CONTINUOUS OVER TWO OR MORE SPANS WITH STRENGTH AXIS PERPENDICULAR TO SUPPORTS. FASTEN SHEATHING TO ALL SUPPORTS AS INDICATED ON S-102.
7. ALL FASTENERS MUST BE GALVANIZED AND COMPLY WITH THE FOLLOWING:

A. BOLTS/NUTS	ASTM A307 / ASTM A563
B. LAG SCREWS	ANSI/ASME STANDARD B18.2.1
C. WOOD SCREWS	ASME B18.6.1 GALVANIZED
D. NAILS	ASTM F1667 GALVANIZED
E. FASTENERS FOR PRESSURE TREATED LUMBER	STAINLESS STEEL

8. UNLESS NOTED OTHERWISE, WOOD FASTENING MUST BE IN ACCORDANCE WITH TABLE 2304.10.1 OF THE 2018 IBC BUILDING CODE.
9. METAL FRAMING ANCHORS, WOOD CONNECTORS AND ACCESSORIES MUST BE GALVANIZED G60; ASTM A653, OR HSLAS (HIGH STRENGTH LOW ALLOY STEEL) TYPE A OR B. BASIS OF DESIGN IS SIMPSON STRONG-TIE. ALTERNATE PRODUCTS OF SIMILAR CONFIGURATION AND EQUAL OR BETTER STRUCTURAL CAPACITY MAY BE SUBMITTED FOR APPROVAL.

BROCKENBROUGH
A Stratus Team Company

STRUCTURAL ABBREVIATIONS

ACI	AMERICAN CONCRETE INSTITUTE
AISC	AMERICAN INSTITUTE FOR STEEL CONSTRUCTION
ARCH	ARCHITECTURE
ASCE	AMERICAN SOCIETY OF CIVIL ENGINEERS
ASTM	AMERICAN SOCIETY FOR TESTING AND MATERIALS
BLDG	BUILDING
CJ	CONTROL JOINT / CONSTRUCTION JOINT
CLR	CLEARANCE
COL	COLUMN
CONC	CONCRETE
CONT	CONTINUOUS
DIA	DIAMETER
DWGS	DRAWINGS
EJ	EXPANSION JOINT
EL	ELEVATION
ELEC	ELECTRICAL
EW	EACH WAY
FTG	FOOTING
G	GRAVITY
GALV	GALVANIZED
H	HEIGHT
HORIZ	HORIZONTAL
HS	HIGH STRENGTH
HSS	HOLLOW STRUCTURAL SECTION
IBC	INTERNATIONAL BUILDING CODE
K, (k)	KIP (1,000 POUNDS)
KSI	KIPS PER SQUARE INCH
LB	POUNDS
MAX	MAXIMUM
MBMA	METAL BUILDING MANUFACTURERS' ASSOCIATION
MECH	MECHANICAL
MFG	MANUFACTURER
MIN	MINIMUM
MPH	MILES PER HOUR
NO	NUMBER
OC	ON CENTER
PEMB	PRE-ENGINEERED METAL BUILDING
PLUMB	PLUMBING
PSF	POUNDS PER SQUARE FOOT
PSI	POUNDS PER SQUARE INCH
REINF	REINFORCEMENT
SCH	SCHEDULE
SQ	SQUARE
STD	STANDARD
TYP	TYPICAL
UFC	UNIFIED FACILITIES CRITERIA
UON	UNLESS OTHERWISE NOTED
VAR	VARIES
VERT	VERTICAL
W/	WITH
WWF	WELDED WIRE FABRIC
°	DEGREES
@	AT
∅	DIAMETER
#	NUMBER
%	PERCENT
±	PLUS OR MINUS

STRUCTURAL LEGEND

- CONCRETE (PLAN)
- CONCRETE (SECTION)
- CONCRETE MASONRY UNIT
- STEEL
- AGGREGATE DRAINAGE COURSE
- COMPACTED SOILS

PRIME
A Stratus Team Company
3715 NORTHSIDE PARKWAY NW
400 NORTHCHASE, SUITE 200
ATLANTA, GEORGIA 30327
404-425-7100

PROJECT:
DALTON PICKLEBALL COMPLEX
904 CIVIC DRIVE,
DALTON, GA 30721

PREPARED FOR:
CITY OF DALTON, GA

REVISIONS

NO.	DATE	DESCRIPTION

SEAL
GEORGIA REGISTERED No. SE001397 STRUCTURAL ENGINEER DAVID S. CLARK
DATE: 08/09/2024

© 2024 PRIME ENGINEERING, INC. Scales, as stated hereon, are valid on the original drawing; the dimensions of which are 24 by 36 inches. These scales, noted hereon, are hereby changed by the ratio of the overall sheet dimensions of the print to corresponding dimensions of the original drawing. This drawing is the property of PRIME ENGINEERING, INCORPORATED and is not to be reproduced or copied in whole or in part. It is not to be used for other work and shall be returned upon request.

DRAWING TITLE
STRUCTURAL ABBREVIATIONS, LEGEND AND NOTES

DRAWING DATE 08/09/2024	DRAWN BY DKW	DESIGNED BY DSC	CHECKED BY DSC
DRAWING SCALE 1/8" = 1'-0"			
PROJECT NUMBER 2024-0283	DRAWING NUMBER S-001		

Project Status

Autodesk Docs://Dalton - Pickleball/24-0283 STRUCT Dalton Pickleball VR22.rvt

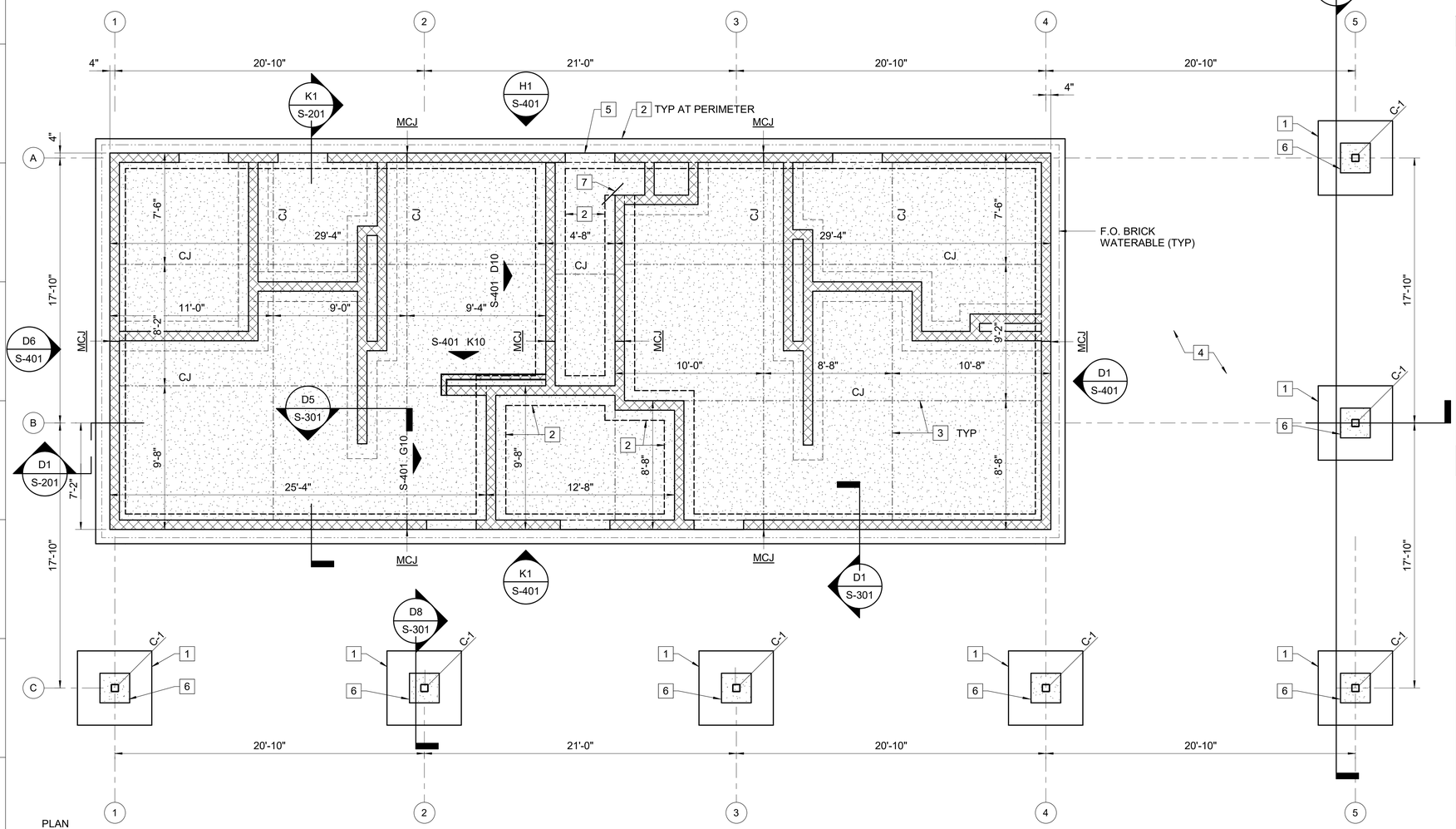

I1 FOUNDATION PLAN
S-101 1/4" = 1'-0"

BROCKENBROUGH
A Stratus Team Company

FOUNDATION PLAN NOTES

1. SEE SHEET S-001 FOR STRUCTURAL NOTES, ABBREVIATIONS, AND LEGEND.
2. REFER TO ARCHITECTURAL DRAWINGS FOR DIMENSIONS, ELEVATIONS, AND ADDITIONAL INFORMATION NOT SHOWN.
3. TOP OF GROUND FLOOR RESTROOM SLAB IS REFERENCE ELEVATION [0'-0"]. SEE CIVIL DRAWINGS FOR ACTUAL FINISHED FLOOR ELEVATION.
4. DIMENSIONS SHOWN ARE TO FACE OF MASONRY, UNLESS NOTED OTHE RWISE. SEE ARCH DWGS FOR WALL LAYOUT DIMENSIONS NOT SHOWN.
5. TYPICAL TOP OF FOOTING ELEVATION IS [-1'-4"].
6. RESTROOM SLAB-ON-GRADE IS 5" THICK, REINFORCED WITH WWF 6x6-W2.9xW2.9, OVER 15mil (MINIMUM) VAPOR RETARDER, OVER 4" DRAINAGE COURSE (GDOT #57 OR APPROVED GRANULAR MATERIAL), OVER PROOFROLLED AND APPROVED BUILDING SUBGRADE.
7. STEEL COLUMNS ARE MARKED "C-1" ON PLAN AND ARE HSS6x6x3/8 UON. SEE BASEPLATE DETAIL ON SHEET S-502.
8. STRUCTURAL MASONRY WALLS ARE SHOWN BEARING ON WALL FOOTINGS, AND ARE 8" CMU, TYPICALLY REINFORCED WITH #4 AT 24" OC VERTICAL BARS AND HORIZONTAL JOINT REINFORCEMENT. ADDITIONAL REINFORCEMENT AT BOND BEAMS AND OPENINGS IS AS INDICATED IN THE DETAILS AND ELEVATIONS. SEE 'MASONRY NOTES' ON SHEET S-001. GROUT CMU SOLID BELOW SLAB ELEVATION.
9. MASONRY CONTROL JOINTS (MCJ) SHOWN INDICATE CMU JOINTS. SEE ARCH DWGS FOR VENEER JOINT LAYOUT.

KEYNOTES

#	
1	COLUMN FOOTING, 5'-0" x 5'-0" x 1'-2" THICK, REINF W/ (7) #5 EACH WAY, TOP & BOTTOM
2	WALL FOOTING, 2'-0 x 1'-0" THICK, SEE SECTION
3	SLAB CONTROL JOINT (CJ), SEE TYPICAL DETAIL ON SHEET S-501
4	FOR EXTERIOR PICNIC AREA SLAB, SEE CIVIL DRAWINGS
5	TURN-DOWN SLAB AT DOOR THRESHOLD, SEE TYPICAL DETAIL ON SHEET S-501
6	CONCRETE PLINTH TO BEAR BRICK WRAP, SEE SECTION.
7	RE-ENTRANT CORNER REINFORCING, SEE TYPICAL DETAIL ON SHEET S-501

GRAPHIC SCALE(S)

1/4" = 1' - 0" 0 1' 5' 10' 15'

PRIME
A Stratus Team Company
3715 NORTHSIDE PARKWAY NW
400 NORTHCREEK, SUITE 200
ATLANTA, GEORGIA 30327
404-425-7100

PROJECT:
DALTON PICKLEBALL COMPLEX
904 CIVIC DRIVE,
DALTON, GA 30721

PREPARED FOR:
CITY OF DALTON, GA

REVISIONS

NO.	DATE	DESCRIPTION

SEAL
GEORGIA REGISTERED No. SE001397 STRUCTURAL ENGINEER DAVID S. CLARK
DATE: 08/09/2024

© 2024 PRIME ENGINEERING, INC. Scales, as stated hereon, are valid on the original drawing; the dimensions of which are 24 by 36 inches. These scales, noted hereon, are hereby changed by the ratio of the overall sheet dimensions of the print to corresponding dimensions of the original drawing. This drawing is the property of PRIME ENGINEERING, INCORPORATED and is not to be reproduced or copied in whole or in part. It is not to be used for other projects and is not to be used on any other project. It is to be returned upon request.

DRAWING TITLE
FOUNDATION PLAN

DRAWN BY	DKW
DESIGNED BY	DSC
CHECKED BY	DSC
DRAWING DATE	08/09/2024
DRAWING SCALE	As indicated
PROJECT NUMBER	2024-0283
DRAWING NUMBER	S-101

Project Status

Autodesk Docs://Dalton - Pickleball/24-0283 STRUCT Dalton Pickleball VR22.rvt

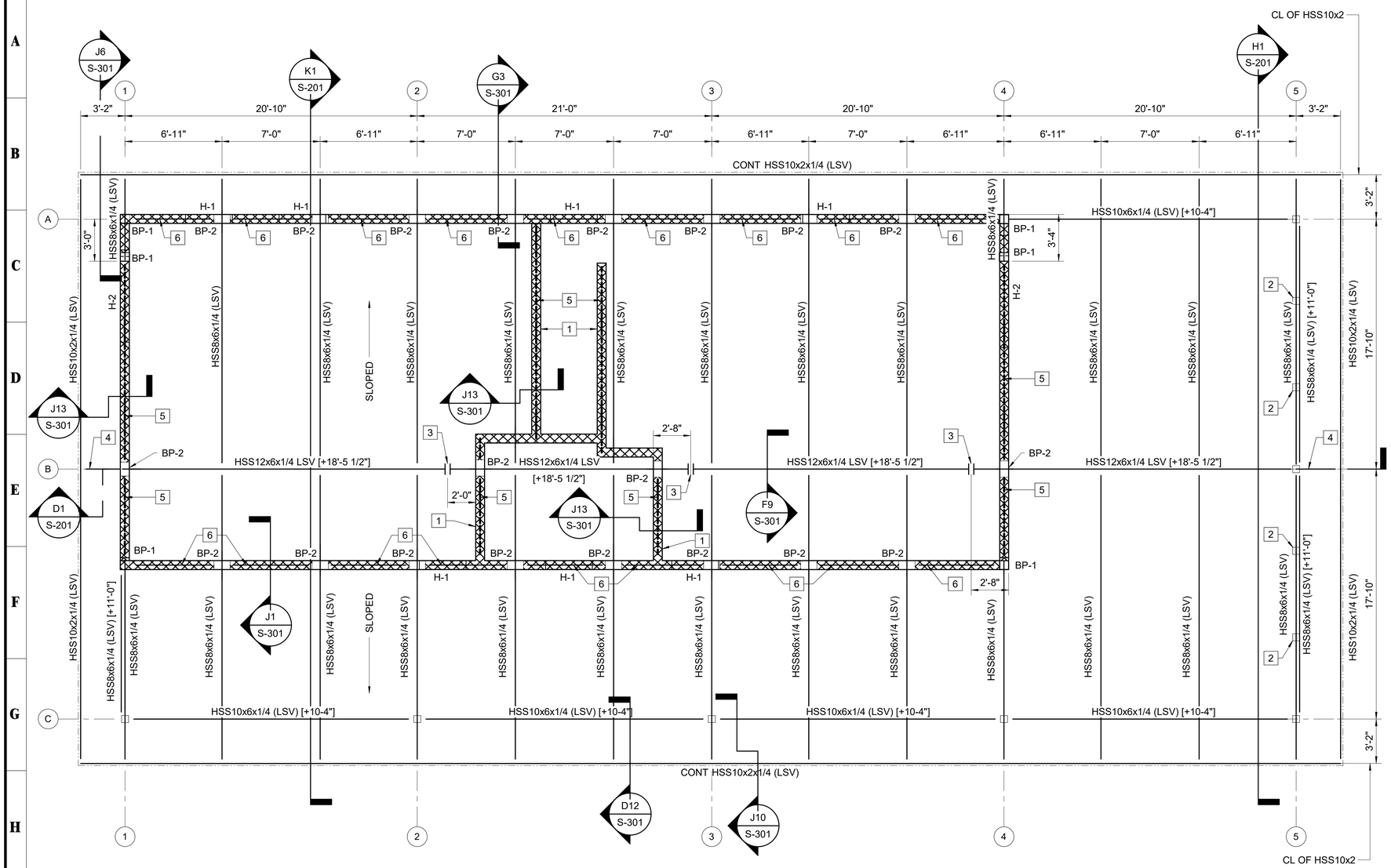

PLAN NORTH

I1 S-102 **ROOF FRAMING PLAN**
1/4" = 1'-0"

BROCKENBROUGH
A Stratus Team Company

ROOF FRAMING PLAN NOTES

1. SEE SHEET S-001 FOR STRUCTURAL NOTES, ABBREVIATIONS, AND LEGEND.
2. SEE ARCHITECTURAL DRAWINGS FOR DIMENSIONS, ELEVATIONS, AND ADDITIONAL INFORMATION NOT SHOWN.
3. DIMENSIONS ARE TO CENTERLINE OF FRAMING UON.
4. TOP OF STEEL ELEVATION IS AS INDICATED THUS [+X'-X"] ON THE FRAMING PLAN, MEASURED RELATIVE TO THE FINISHED FLOOR DATUM. WORKPOINTS FOR SLOPED FRAMING ARE OFFSET FROM TOPS OF GIRDERS AND ARE INDICATED IN THE SECTIONS.
5. STEEL BEARING PLATES ARE INDICATED ON PLAN 'BP-x', SEE TYPICAL DETAIL ON SHEET S-502. BEARING PLATE ELEVATIONS DO NOT ALIGN WITH COURSING. LOCATE BEARING PLATES TO SUIT STEEL FRAMING.
6. SHELTER/RESTROOM ROOF DECKING IS 2" NOMINAL THICKNESS CONTROLLED-RANDOM LAYUP TONGUE-AND-GROOVE LUMBER DECKING SPANNING PERPENDICULAR TO STEEL, WITH 1/2" (NOMINAL) PLYWOOD SHEATHING OVERLAY. FASTEN DECKING TO STEEL USING MECHANICALLY GALVANIZED PROPRIETARY SELF-DRILLING SCREWS SUITED FOR WOOD-TO-STEEL FASTENING. USE (2) SCREWS MINIMUM AT EACH SUPPORT, EACH PLANK. BASIS OF DESIGN IS SIMPSON STRONG-DRIVE TF WOOD-TO-STEEL SCREWS.
7. CMU BOND BEAM HEADERS ARE INDICATED 'H-x' ON PLAN. SEE TYPICAL DETAIL ON SHEET S-502.

KEYNOTES

#	
1	ATTACH STRUCTURAL CMU WALL TO DECKING, SEE DETAIL ON SHEET S-301
2	HSS6x6x1/4 TRUSS VERTICAL WEB, SEE SHEET S-201
3	BEAM SPLICE, SEE SECTION F2/S-301
4	HSS6x6x3/8 CANTILEVER, ELEV [+18'-5 1/2"]
5	HSS4x2x3/16 CONT ALONG TOP OF WALL, SEE SECTION
6	L4x4x1/4 COLLECTOR BETWEEN HSS RAFTERS, SEE SECTION

GRAPHIC SCALE(S)

1/4" = 1' - 0" 0 1' 5' 10' 15'

PRIME A Stratus Team Company
3715 NORTHSIDE PARKWAY NW
400 NORTHCHEEK, SUITE 200
ATLANTA, GEORGIA 30327
404-425-7100

PROJECT:
DALTON PICKLEBALL COMPLEX
904 CIVIC DRIVE,
DALTON, GA 30721

PREPARED FOR:
CITY OF DALTON, GA

REVISIONS

NO.	DATE	DESCRIPTION

SEAL
GEORGIA REGISTERED No. SE001397 STRUCTURAL ENGINEER DAVID S. CLARK
DATE: 08/09/2024

© 2024 PRIME ENGINEERING, INC. Scales, as stated hereon, are valid on the original drawing; the dimensions of which are 24 by 36 inches. These scales, noted hereon, are hereby changed by the ratio of the overall sheet dimensions of the print to corresponding dimensions of the original drawing. This drawing is the property of PRIME ENGINEERING, INCORPORATED and is not to be reproduced or copied in whole or in part. It is not to be used for other work and is not to be used for identified herein and is not to be used on any other project. It is to be returned upon request.

DRAWING TITLE
FRAMING PLAN

DRAWN BY	DKW
DESIGNED BY	DSC
CHECKED BY	DSC
DRAWING DATE	08/09/2024
DRAWING SCALE	As indicated
PROJECT NUMBER	2024-0283
DRAWING NUMBER	S-102

Project Status

Autodesk Docs://Dalton - Pickleball/24-0283 STRUCT Dalton Pickleball VR22.rvt

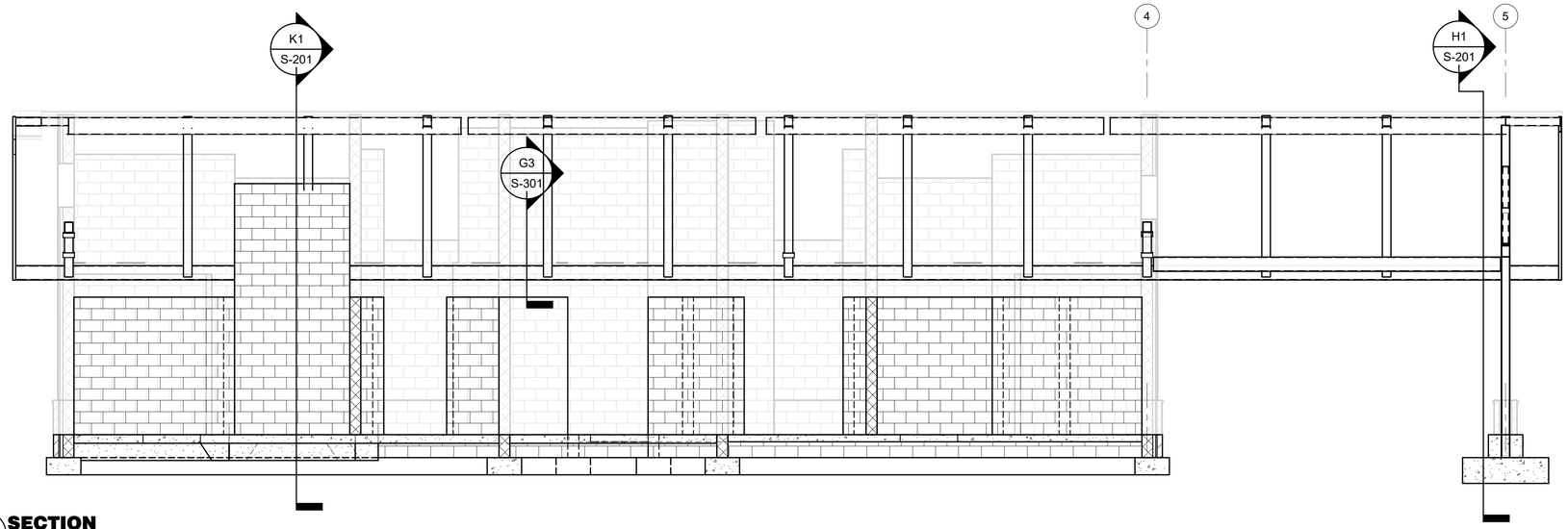

D1 SECTION S-201 1/4" = 1'-0"

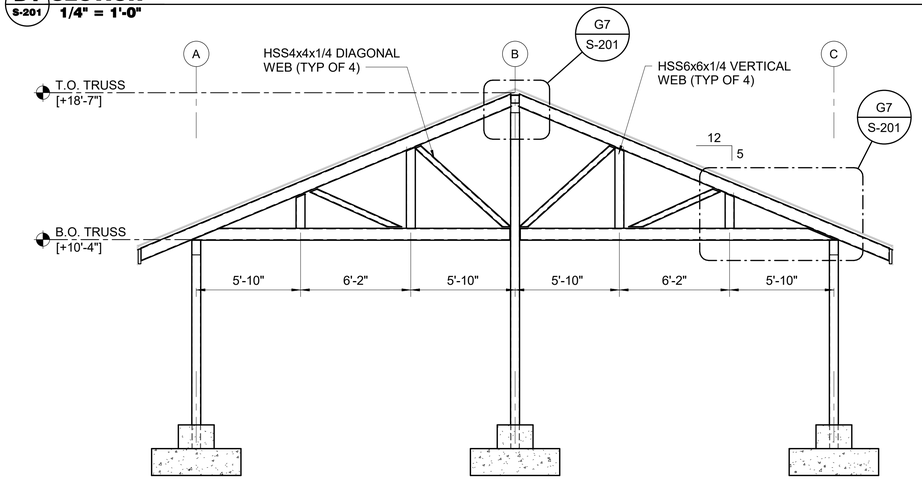

H1 SECTION S-201 1/4" = 1'-0"

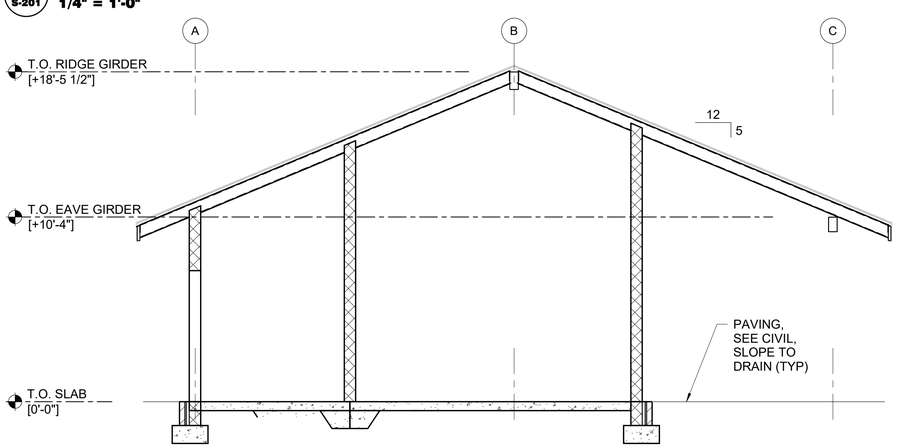

K1 SECTION S-201 1/4" = 1'-0"

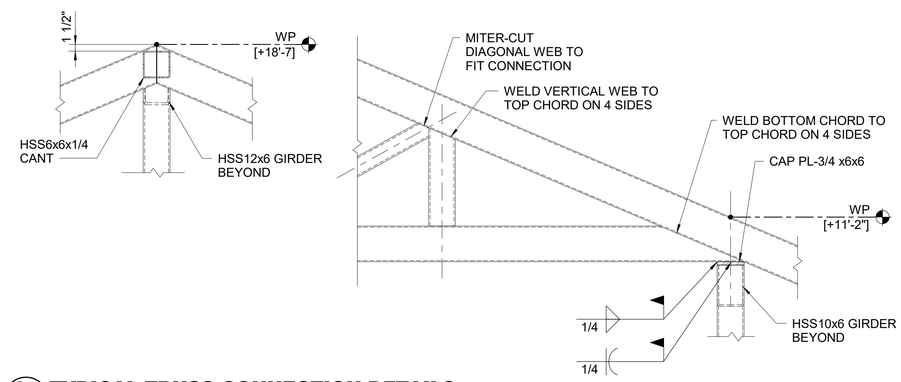

G7 TYPICAL TRUSS CONNECTION DETAILS S-201 3/4" = 1'-0"

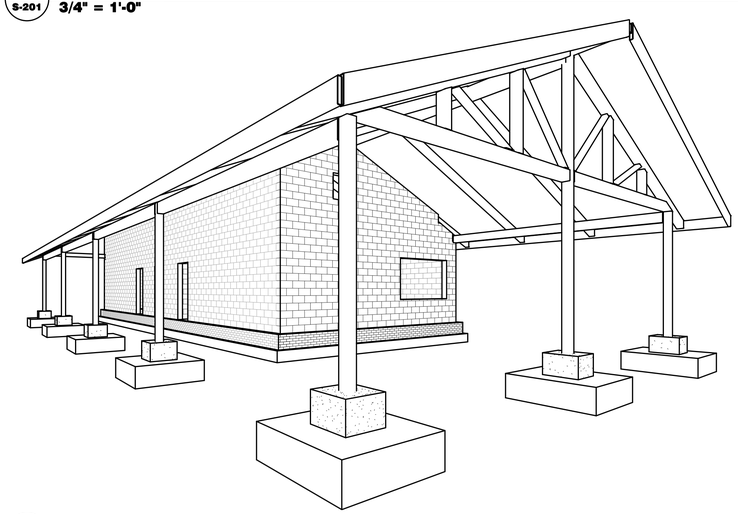

K8 SOUTHEAST 3-D VIEW (FOR REFERENCE ONLY) S-201

GRAPHIC SCALE(S)

1/4" = 1' - 0" 0 1' 5' 10' 15'

BROCKENBROUGH
A Stratus Team Company

PRIME
A Stratus Team Company
3715 NORTHSIDE PARKWAY NW
400 NORTHCREEK, SUITE 200
ATLANTA, GEORGIA 30327
404-425-7100

PROJECT:
DALTON PICKLEBALL COMPLEX
904 CIVIC DRIVE,
DALTON, GA 30721

PREPARED FOR:
CITY OF DALTON, GA

REVISIONS

NO.	DATE	DESCRIPTION

SEAL
GEORGIA REGISTERED No. SE001397 STRUCTURAL ENGINEER DAVID S. CLARK
DATE: 08/09/2024

© 2024 PRIME ENGINEERING, INC. Scales, as stated hereon, are valid on the original drawing; the dimensions of which are 24 by 36 inches. These scales, noted hereon, are hereby changed by the ratio of the overall sheet dimensions of the print to corresponding dimensions of the original drawing. This drawing is the property of PRIME ENGINEERING, INCORPORATED and is not to be reproduced or copied in whole or in part. It is not to be used for any purpose other than specifically identified herein and is not to be used on any other project. It is to be returned upon request.

DRAWING TITLE
SECTIONS

DRAWN BY DKW
DESIGNED BY DSC
CHECKED BY DSC
DRAWING DATE 08/09/2024
DRAWING SCALE As indicated
PROJECT NUMBER 2024-0283
DRAWING NUMBER S-201
Project Status

Autodesk Docs://Dalton - Pickleball/24-0283 STRUCT Dalton Pickleball VR22.rvt

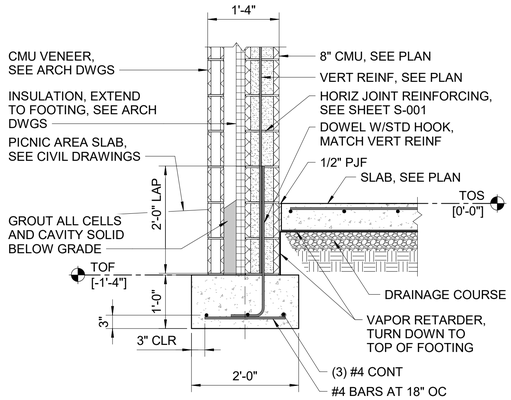

D1 SECTION S-301 — 3/4" = 1'-0"

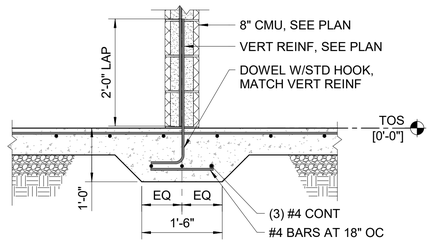

FOR REPEATED NOTES SEE SECTION D1 THIS SHEET

D5 SECTION S-301 — 3/4" = 1'-0"

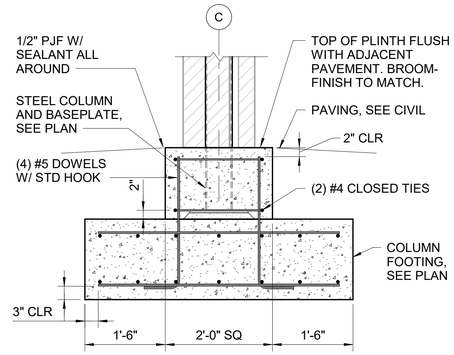

D8 SECTION S-301 — 3/4" = 1'-0"

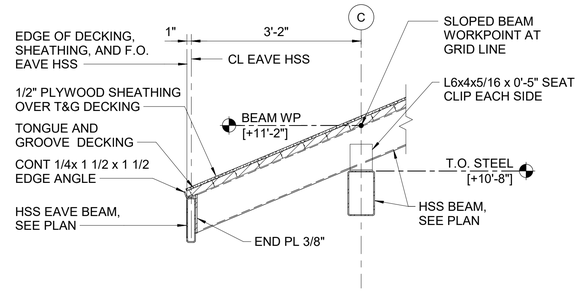

FOR REPEATED NOTES SEE SECTION G3 THIS SHEET

D12 SECTION S-301 — 3/4" = 1'-0"

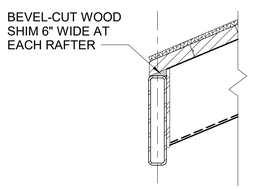

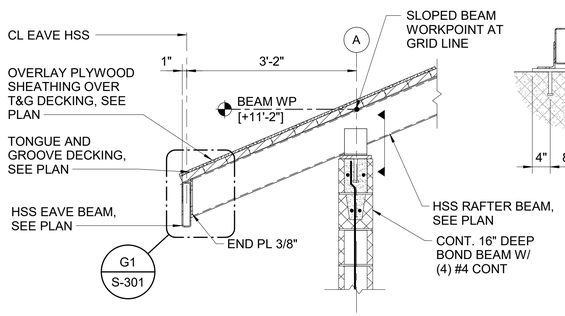

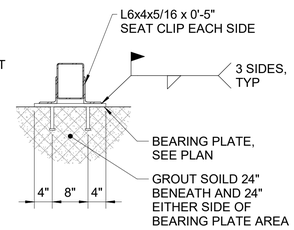

SECTION 'A-A'

G1 DETAIL S-301 — 1 1/2" = 1'-0"

G3 SECTION S-301 — 3/4" = 1'-0"

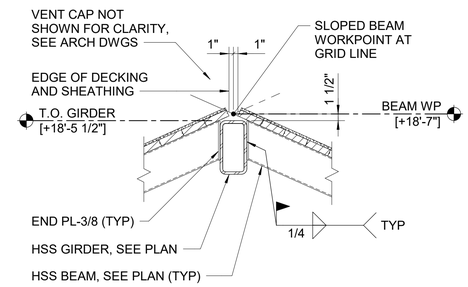

F9 SECTION S-301 — 3/4" = 1'-0"

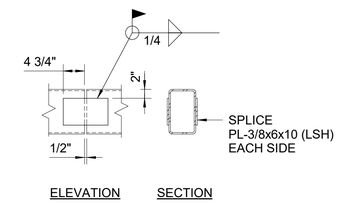

F12 SECTION S-301 — 3/4" = 1'-0"

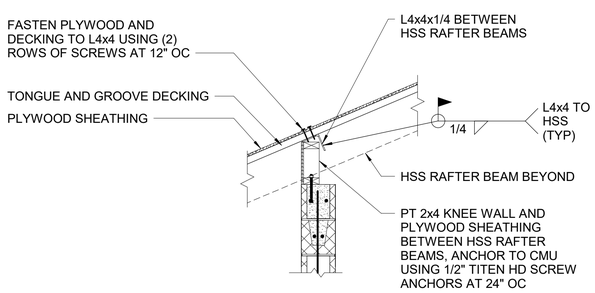

J1 SECTION S-301 — 3/4" = 1'-0"

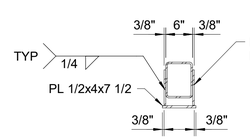

TYPICAL SEAT ANGLE AT BP-1

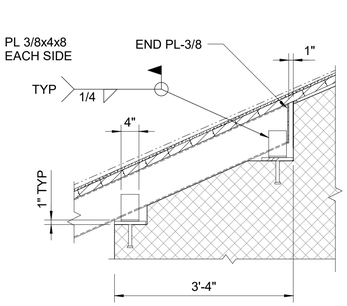

J6 SECTION S-301 — 3/4" = 1'-0"

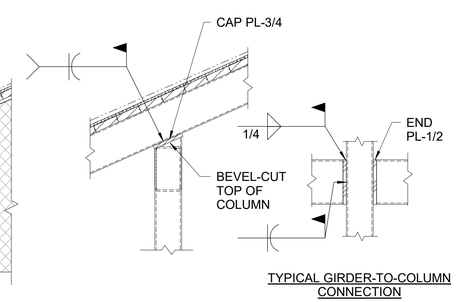

TYPICAL GIRDER-TO-COLUMN CONNECTION

J10 SECTION S-301 — 3/4" = 1'-0"

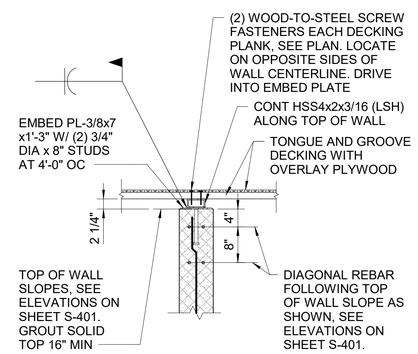

J13 SECTION S-301 — 3/4" = 1'-0"

GRAPHIC SCALE(S)

3/4" = 1' - 0" 0 6" 1' 2' 3' 4' 5'

BROCKENBROUGH — A Stratus Team Company

PRIME — A Stratus Team Company
3715 NORTHSIDE PARKWAY NW
400 NORTHCREEK, SUITE 200
ATLANTA, GEORGIA 30327
404-425-7100

PROJECT: DALTON PICKLEBALL COMPLEX
904 CIVIC DRIVE, DALTON, GA 30721

PREPARED FOR: CITY OF DALTON, GA

REVISIONS

NO.	DATE	DESCRIPTION

SEAL: GEORGIA REGISTERED No. SE001397 STRUCTURAL ENGINEER DAVID S. CLARK — DATE: 08/09/2024

© 2024 PRIME ENGINEERING, INC. Scales, as stated hereon, are valid on the original drawing; the dimensions of which are 24 by 36 inches. These scales, noted hereon, are hereby changed by the ratio of the overall sheet dimensions of the print to corresponding dimensions of the original drawing. This drawing is the property of PRIME ENGINEERING, INCORPORATED and is not to be reproduced or copied in whole or in part. It is only to be used for the project and the specific purpose identified herein and is not to be used on any other project. It is to be returned upon request.

DRAWING TITLE: SECTIONS

DRAWN BY	DKW
DESIGNED BY	DSC
CHECKED BY	DSC
DRAWING DATE	08/09/2024
DRAWING SCALE	As indicated
PROJECT NUMBER	2024-0283
DRAWING NUMBER	S-301

Project Status

Autodesk Docs://Dalton - Pickleball/24-0283 STRUCT Dalton Pickleball VR22.rvt

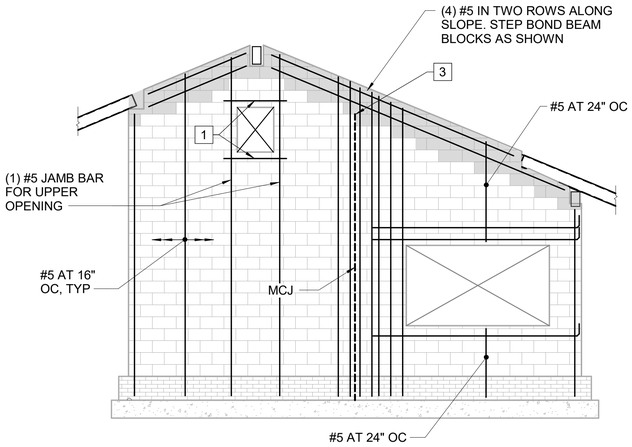

D1 EAST ELEVATION (S-401)
1/4" = 1'-0"

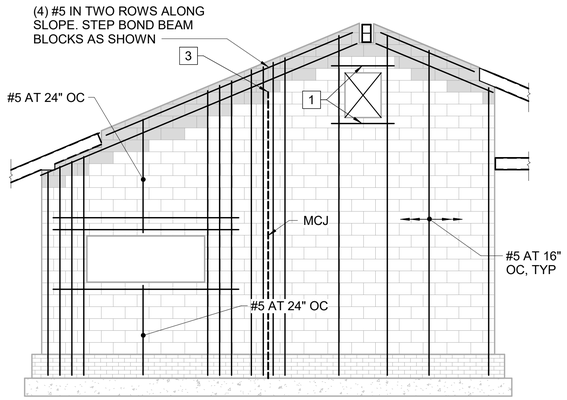

D6 WEST ELEVATION (S-401)
1/4" = 1'-0"

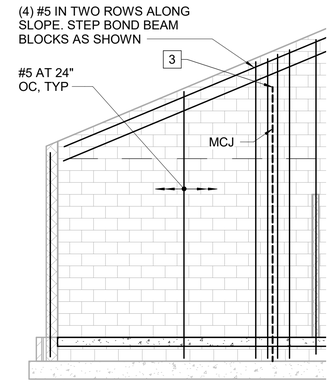

D10 VIEW 'A-A' (S-401)
1/4" = 1'-0"

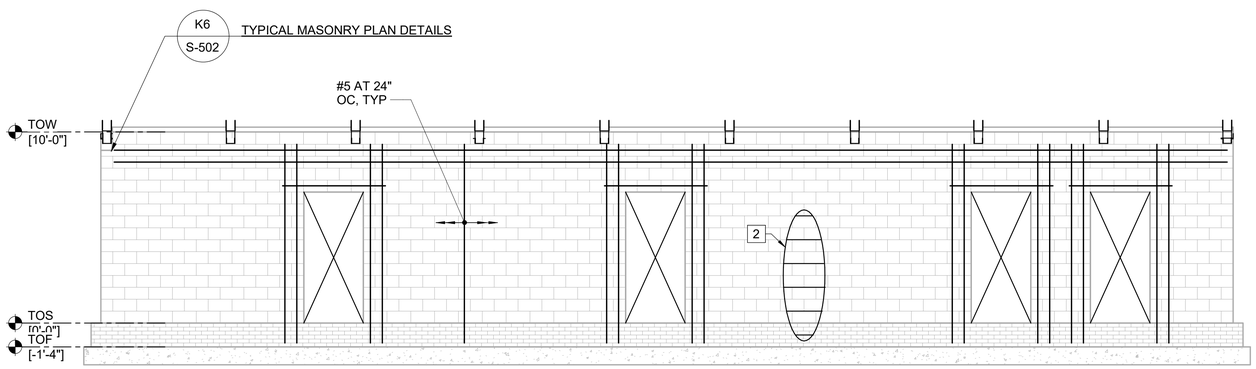

H1 NORTH ELEVATION (S-401)
1/4" = 1'-0"

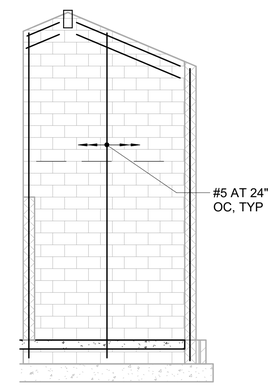

G10 VIEW 'C-C' (S-401)
1/4" = 1'-0"

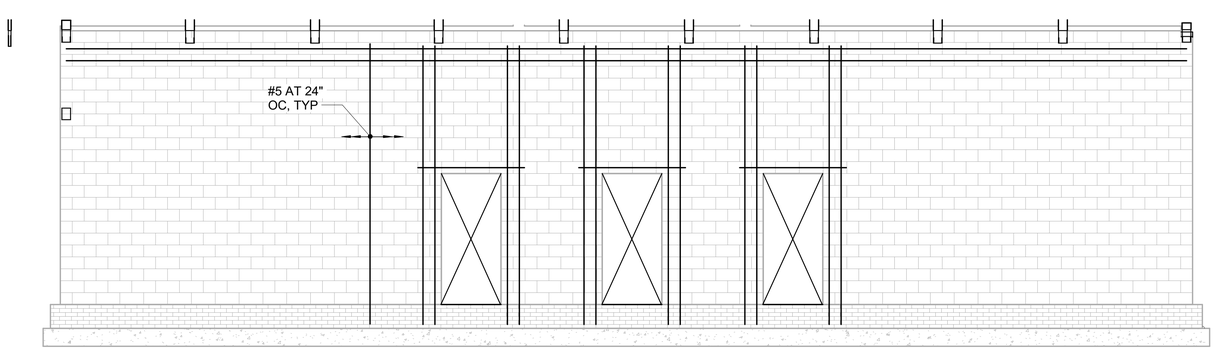

K1 SOUTH ELEVATION (S-401)
1/4" = 1'-0"

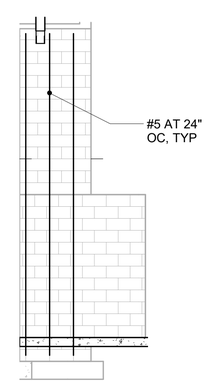

K10 VIEW 'B-B' (S-401)
1/4" = 1'-0"

ELEVATION NOTES

1. FOOTINGS AND DOWELS NOT SHOWN FOR CLARITY. PROVIDE HOOKED DOWELS AT ALL VERTICAL REINFORCING BARS.
2. SEE 'TYPICAL BOND BEAM LINTEL DETAIL' ON SHEET S-501 FOR OPENING REINFORCING.
3. SEE PLAN FOR MASONRY CONTROL JOINTS. NOT ALL MASONRY CONTROL JOINTS ARE SHOWN.
4. COORDINATE REINFORCING LAYOUTS, EMBEDDED ITEMS, AND BEARIG PLATES WITH OTHER DETAILS. BEARING PLATE ELEVATIONS DO NOT ALIGN WITH COURSING AND MUST BE ESTABLISHED TO SUIT STEEL FRAMING.
5. SUBMIT MASONRY REINFORCING SHOP DRAWINGS TO A/E FOR REVIEW. INCLUDE ELEVATION VIEWS OF ALL WALLS.
6. SEE ARCH DWGS FOR INTERIOR NON-LOADBEARING WALLS.

KEYNOTES

1 8" DEEP BOND BEAM HEADER/SILL WITH (2) #4, EXTEND 8" (MIN) BEYOND EDGE OF OPENING

2 CONTINUOUS HOT-DIP GALVANIZED W1.7 LADDER-TYPE HORIZONTAL JOINT REINFORCING. LOCATE REINFORCING 8" ABOVE FOOTING AND AT 16" OC VERTICALLY OVER REMAINING WALL HEIGHT. USE PREFABRICATED CORNER AND INTERSECTION ELEMENTS. LADDER REINFORCING IS NOT REQUIRED WITHIN TOP BOND BEAM.

3 DO NOT EXTEND MCJ INTO TOP 1'-4" BOND BEAM

GRAPHIC SCALE(S)

1/4" = 1' - 0" 0 1' 5' 10' 15'

BROCKENBROUGH
A Stratus Team Company

PRIME
A Stratus Team Company
3715 NORTHSIDE PARKWAY NW
400 NORTHCHEEKS, SUITE 200
ATLANTA, GEORGIA 30327
404-425-7100

PROJECT:
DALTON PICKLEBALL COMPLEX
904 CIVIC DRIVE,
DALTON, GA 30721

PREPARED FOR:
CITY OF DALTON, GA

REVISIONS

NO.	DATE	DESCRIPTION

SEAL
GEORGIA REGISTERED No. SE001397 STRUCTURAL ENGINEER DAVID S. CLARK
DATE: 08/09/2024

© 2024 PRIME ENGINEERING, INC.
Scales, as stated hereon, are valid on the original drawing; the dimensions of which are 24 by 36 inches. These scales, noted hereon, are hereby changed by the ratio of the overall sheet dimensions of the print to corresponding dimensions of the original drawing.
This drawing is the property of PRIME ENGINEERING, INCORPORATED and is not to be reproduced or copied in whole or in part. It is not to be used for purposes not specifically mentioned or identified herein and is not to be used on any other project. It is to be returned upon request.

DRAWING TITLE
ELEVATIONS

DRAWN BY	DKW
DESIGNED BY	DSC
CHECKED BY	DSC
DRAWING DATE	08/09/2024
DRAWING SCALE	1/4" = 1'-0"
PROJECT NUMBER	2024-0283
DRAWING NUMBER	S-401

Project Status

Autodesk Docs://Dalton - Pickleball/24-0283 STRUCT Dalton Pickleball VR22.rvt

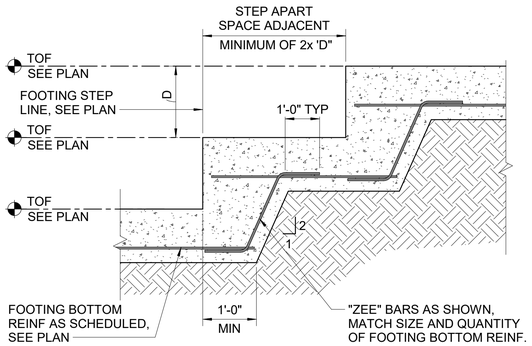

C1 TYPICAL FOOTING STEP DETAIL
S-501 3/4" = 1'-0"

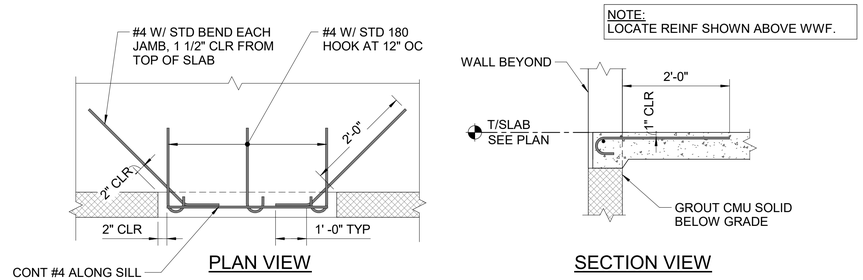

C6 TYPICAL SLAB-ON-GRADE DETAIL AT EXTERIOR DOOR OPENING
S-501 3/4" = 1'-0"

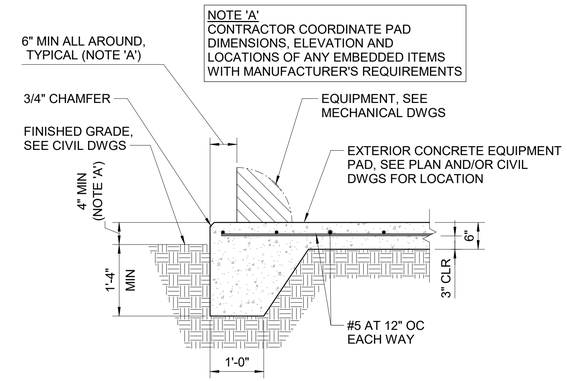

E12 TYPICAL EXTERIOR CONCRETE EQUIPMENT PAD
S-501 3/4" = 1'-0"

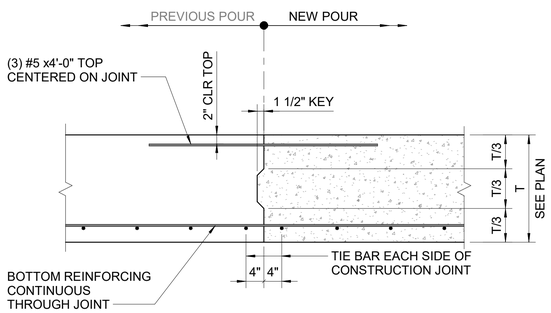

F1 TYPICAL WALL FOOTING CONSTRUCTION JOINT
S-501 3/4" = 1'-0"

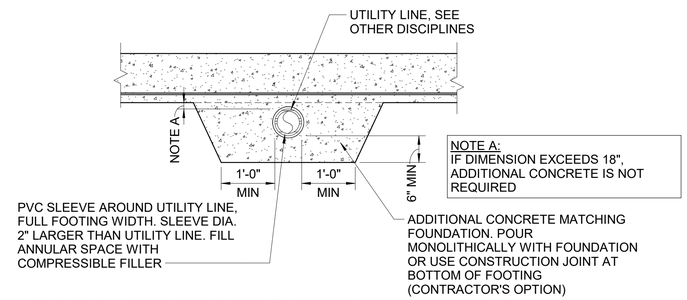

F6 TYPICAL UTILITY PIPE SLEEVE BENEATH WALL FOUNDATION
S-501 3/4" = 1'-0"

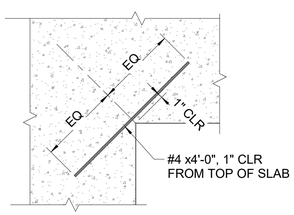

I1 TYPICAL SLAB-ON-GRADE RE-ENTRANT CORNER REINFORCING
S-501 3/4" = 1'-0"

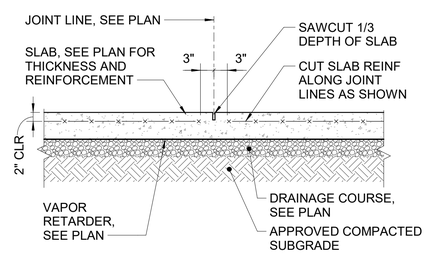

I6 TYPICAL SLAB-ON-GRADE CONTROL JOINT (CJ)
S-501 3/4" = 1'-0"

BROCKENBROUGH
A Stratus Team Company

PRIME
A Stratus Team Company
3715 NORTHSIDE PARKWAY NW
400 NORTHCREEK, SUITE 200
ATLANTA, GEORGIA 30327
404-425-7100

PROJECT:
DALTON PICKLEBALL COMPLEX
904 CIVIC DRIVE,
DALTON, GA 30721

PREPARED FOR:
CITY OF DALTON, GA

REVISIONS

NO.	DATE	DESCRIPTION

SEAL
GEORGIA REGISTERED No. SE001397 STRUCTURAL ENGINEER DAVID S. CLARK
DATE: 08/09/2024

© 2024 PRIME ENGINEERING, INC.
Scales, as stated hereon, are valid on the original drawing; the dimensions of which are 24 by 36 inches. These scales, noted hereon, are hereby changed by the ratio of the overall sheet dimensions of the print to corresponding dimensions of the original drawing.
This drawing is the property of PRIME ENGINEERING, INCORPORATED and is not to be reproduced or copied in whole or in part. It is not to be used for identified herein and is not to be used on any other project. It is to be returned upon request.

DRAWING TITLE
SECTIONS AND DETAILS

DRAWING DATE 08/09/2024
DRAWN BY DKW
DRAWING SCALE 3/4" = 1'-0"
DESIGNED BY DSC
PROJECT NUMBER 2024-0283
CHECKED BY DSC
DRAWING NUMBER S-501
Project Status

Autodesk Docs://Dalton - Pickleball/24-0283 STRUCT Dalton Pickleball VR22.rvt

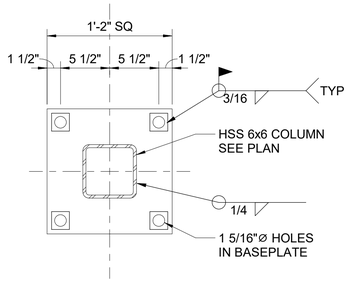

PLAN DETAIL

3/4" THICK
(4) 3/4"Ø ANCHOR RODS
9" EMBED., 6" PROJ.
PL-1/4x2x2 WASHERS

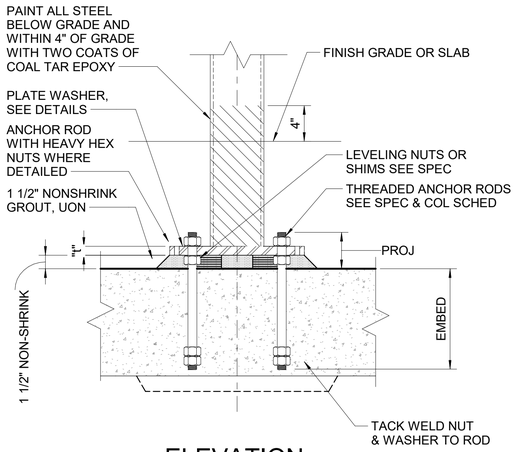

ELEVATION

D1 / S-502 TYPICAL STEEL BASEPLATE DETAILS
1 1/2" = 1'-0"

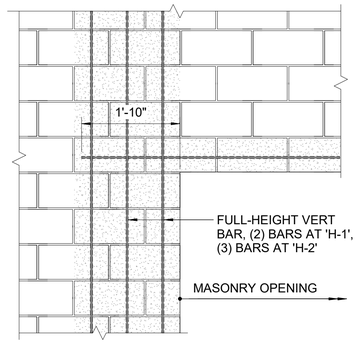

ELEVATION

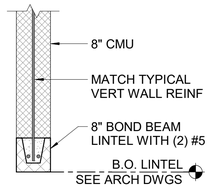

'H-1' SECTION
(MAX CLEAR SPAN = 4'-0")

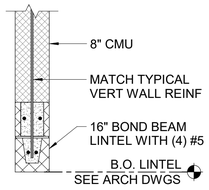

'H-2' SECTION
(MAX CLEAR SPAN = 8'-8")

NOTES:
1. PROVIDE 8" BOND BEAM WITH (2) #5 ACROSS SILL WHERE OPENING DOES NOT EXTEND DOWN TO SLAB.

D8 / S-502 TYPICAL CMU BOND BEAM LINTEL DETAIL
3/4" = 1'-0"

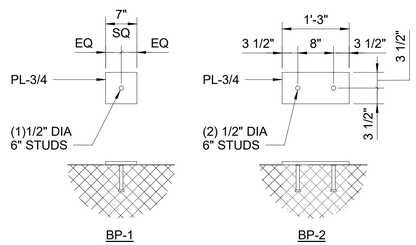

F1 / S-502 BEARING PLATE DETAILS
3/4" = 1'-0"

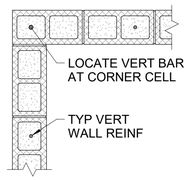

WALL CORNER

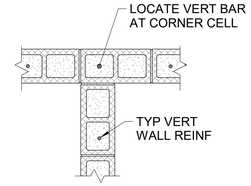

WALL TEE

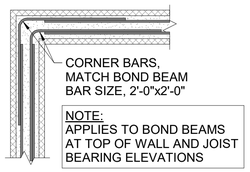

NOTE:
APPLIES TO BOND BEAMS AT TOP OF WALL AND JOIST BEARING ELEVATIONS

BOND BEAM CORNER

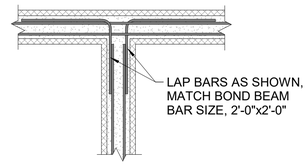

BOND BEAM TEE

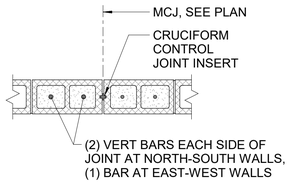

CONTROL JOINT (MCJ)

K6 / S-502 TYPICAL MASONRY PLAN DETAILS
3/4" = 1'-0"

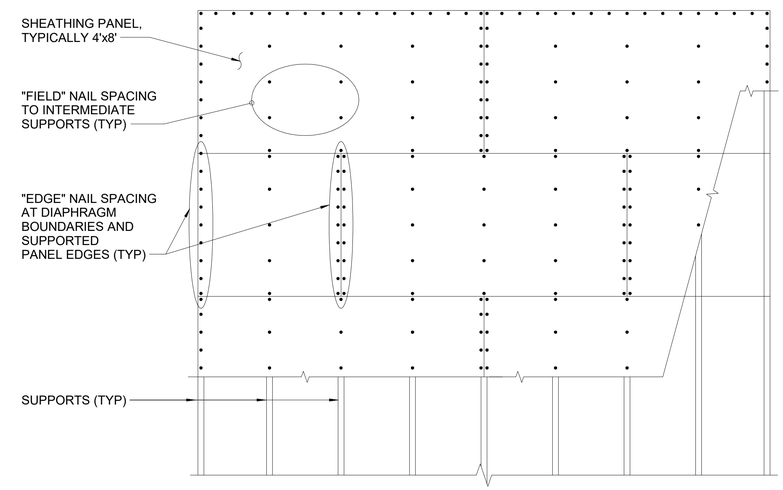

SHEATHING FASTENING SCHEDULE			
SHEATHING	NAIL SIZE	"EDGE" SPACING	"FIELD" SPACING
ROOF	8d	6" OC	12" OC
GABLE/END WALL	8d	6" OC	12" OC

NOTES:

1. ROOF AND GABLE/END WALL SHEATHING IS UNBLOCKED.
2. SEE FRAMING PLAN FOR SHEATHING THICKNESS AND DESIGN PROPERTIES. SEE SPECIFICATIONS FOR SHEATHING REQUIREMENTS.
3. AT ROOF SHEATHING, PROVIDE "EDGE" NAIL SPACING INTO TRUSS HORIZONTAL BLOCKING ALONG BEARING WALLS BELOW. SEE "TYPICAL TRUSS BLOCKING DETAIL" ON THIS SHEET.

K10 / S-502 TYPICAL SHEATHING FASTENING DETAIL
1/2" = 1'-0"

1 1/2"=1'-0" 0' 1' 2'

3/4"=1'-0" 0 1' 2' 3' 4'

BROCKENBROUGH
A Stratus Team Company

PRIME
A Stratus Team Company
3715 NORTHSIDE PARKWAY NW
400 NORTHCREEK, SUITE 200
ATLANTA, GEORGIA 30327
404-425-7100

PROJECT:
DALTON PICKLEBALL COMPLEX
904 CIVIC DRIVE,
DALTON, GA 30721

PREPARED FOR:
CITY OF DALTON, GA

REVISIONS

NO.	DATE	DESCRIPTION

SEAL
GEORGIA REGISTERED No. SE001397 STRUCTURAL ENGINEER DAVID S. CLARK
DATE: 08/09/2024

© 2024 PRIME ENGINEERING, INC. Scales, as stated hereon, are valid on the original drawing; the dimensions of which are 24 by 36 inches. These scales, noted hereon, are hereby changed by the ratio of the overall sheet dimensions of the print to corresponding dimensions of the original drawing. This drawing is the property of PRIME ENGINEERING, INCORPORATED and is not to be reproduced or copied in whole or in part. It is only to be used for the project and for specifications identified herein and is not to be used on any other project. It is to be returned upon request.

DRAWING TITLE
DETAILS

DRAWN BY DKW
DESIGNED BY DSC
CHECKED BY DSC
DRAWING DATE 08/09/2024
DRAWING SCALE As indicated
PROJECT NUMBER 2024-0283
DRAWING NUMBER S-502
Project Status

Autodesk Docs://Dalton - Pickleball/24-0283 STRUCT Dalton Pickleball VR22.rvt

GENERAL NOTES

1. THE STRUCTURAL DRAWINGS MUST BE USED ALONG WITH THE PROJECT SPECIFICATIONS AND OTHER DISCIPLINE DRAWINGS.
2. THE CONTRACTOR MUST VERIFY ALL DIMENSIONS PRIOR TO CONSTRUCTION. COORDINATE STRUCTURAL DRAWINGS WITH ARCHITECTURAL, MECHANICAL, ELECTRICAL, PLUMBING AND CIVIL. NOTIFY THE STRUCTURAL ENGINEER OF RECORD OF ANY DISCREPANCIES OR INCONSISTENCIES.
3. PRIME ENGINEERING INC., HAS MADE NO INDEPENDENT INVESTIGATION AND ASSUMES NO RESPONSIBILITY FOR THE ACCURACY, OR LACK THEREOF, FOR THE LOCATIONS, OR EXISTENCE, OF ANY UNDERGROUND ITEMS. SIMILARLY, THERE MAY BE ADDITIONAL ITEMS UNDERGROUND NOT SHOWN ON DRAWINGS. ALL NECESSARY UNDERGROUND CLEARANCES FOR CONSTRUCTION ACTIVITIES RELATED TO THE PROJECT SHALL BE GIVEN BY, AND THE SOLE RESPONSIBILITY, OF THE OWNER.
4. CONTRACTOR MUST VERIFY EXISTING CONDITIONS INCLUDING GRADES, UTILITIES, AND HIDDEN CONDITIONS AND COORDINATE THESE CONDITIONS WITH THE CONTRACT DOCUMENTS. NOTIFY THE OWNER OF EXISTING CONDITIONS THAT ARE NOT AS SHOWN.
5. THE STRUCTURAL DRAWINGS REPRESENT THE COMPLETED STRUCTURE. MEANS AND METHODS OF CONSTRUCTION ARE THE SOLE RESPONSIBILITY OF THE CONTRACTOR, INCLUDING CONSTRUCTION TECHNIQUES, SEQUENCES, PROCEDURES, AND ALL TEMPORARY SUPPORTS AND BRACING. DESIGN, ADEQUACY, AND SAFETY OF TEMPORARY ERECTION SUPPORTS AND BRACING IS THE SOLE RESPONSIBILITY OF CONTRACTOR. CONTRACTOR IS RESPONSIBLE FOR COMPLYING WITH OSHA SAFETY REGULATIONS.
6. THE CONTRACTOR MUST PROVIDE ALL MEASURES NECESSARY TO PROTECT STRUCTURAL ELEMENTS AND ADJACENT CONSTRUCTION.
7. CONTRACTOR MUST REVIEW AND STAMP ALL SHOP DRAWINGS BEFORE SUBMITTING FOR ENGINEER REVIEW. SHOP DRAWINGS MUST CLEARLY NOTE ANY PROPOSED CHANGES OR ALTERNATE DETAILS TO STRUCTURAL DRAWINGS.
8. REVIEW OF SUBMITTALS AND/OR SHOP DRAWINGS BY THE STRUCTURAL ENGINEER OR RECORD DOES NOT RELIEVE THE CONTRACTOR OF THE RESPONSIBILITY TO REVIEW SHOP DRAWINGS BEFORE SUBMITTAL TO THE STRUCTURAL ENGINEER. THE CONTRACTOR REMAINS SOLELY RESPONSIBLE FOR ERRORS AND OMISSIONS ASSOCIATED WITH THE PREPARATION OF SHOP DRAWINGS AS THEY PERTAIN TO MEMBER SIZES, DETAILS, AND DIMENSIONS SPECIFIED IN THE CONTRACT DOCUMENTS.
9. DETAILS AND SECTIONS INDICATED ALSO APPLY TO REPEATED AND SIMILAR CONDITIONS THROUGHOUT THE PROJECT, UNLESS OTHERWISE NOTED.
10. DO NOT SCALE DRAWINGS. FOLLOW DIMENSIONS ON PLANS.
11. COORDINATE AND VERIFY FLOOR, ROOF AND WALL OPENING SIZES AND LOCATIONS WITH ARCHITECTURAL, MECHANICAL, PLUMBING AND ELECTRICAL DRAWINGS. FOR ADDITIONAL OPENINGS NOT SHOWN ON THE STRUCTURAL DRAWINGS SEE ARCHITECTURAL AND MECHANICAL DRAWINGS."
12. THE PROJECT REQUIRES THIRD-PARTY SPECIAL INSPECTIONS PER GEORGIA BUILDING CODE CHAPTER 17. SPECIAL INSPECTION REPORTS AND A FINAL REPORT IN ACCORDANCE WITH SECTION 1704.2.4 SHALL BE SUBMITTED TO THE BUILDING OFFICIAL PRIOR TO THE TIME THAT PHASE OF THE WORK IS APPROVED FOR OCCUPANCY.

DESIGN NOTES

1. STRUCTURAL DESIGN IS BASED ON THE FOLLOWING CODES AND STANDARDS:
   A. GEORGIA STATE MINIMUM STANDARD BUILDING CODE (IBC 2018 WITH AMENDMENTS)
   B. ASCE 7-16 "MINIMUM DESIGN LOADS AND ASSOCIATED CRITERIA FOR BUILDINGS AND OTHER STRUCTURES"
   C. ACI 318-14, "BUILDING CODE REQUIREMENTS FOR STRUCTURAL CONCRETE"
2. LOADS AND DESIGN CRITERIA:

A. RISK CATEGORY	II
B. LIVE LOADS (UNIFORM)	
a. ROOF	20 PSF
C. WIND LOADS	
a. ULTIMATE DESIGN WIND SPEED	105 MPH
b. NOMINAL DESIGN WIND SPEED	82 MPH
c. WIND EXPOSURE CATEGORY	C
d. ENCLOSURE CLASSIFICATION	ENCLOSED
e. INTERNAL PRESSURE COEFFICIENT, GCpi	±0.18
f. WIND BASE SHEAR	BY PEMB DESIGNER
g. COMPONENTS AND CLADDING PRESSURES	BY PEMB DESIGNER
D. SNOW LOADS	
a. GROUND SNOW LOAD, Pg	10 PSF
E. SEISMIC DESIGN DATA	
a. SEISMIC IMPORTANCE FACTOR, Ie	1.0
b. MAPPED SPECTRAL RESPONSE ACCEL, Ss	0.522 (g)
c. MAPPED SPECTRAL RESPONSE ACCEL, S1	0.123 (g)
d. DESIGN SPECTRAL RESPONSE ACCEL, SDS	0.449 (g)
e. DESIGN SPECTRAL RESPONSE ACCEL, SD1	0.123 g)
f. SEISMIC SITE CLASS (PER GEOTECH REPORT)	C
g. SEISMIC DESIGN CATEGORY	C
h. ANALYSIS PROCEDURE	EQUIVALENT LATERAL FORCE
i. SEISMIC FORCE RESISTING SYSTEM, AND DESIGN BASE SHEAR	BY PEMB DESIGNER
F. SOIL LATERAL LOADS	
a. ACTIVE EARTH PRESSURE, Pa	45 PSF/FT
b. AT-REST EARTH PRESSURE, P0	66 PSF/FT
c. EARTH PRESSURE, PASSIVE, Pp	350 PSF/FT
d. HYDROSTATIC PRESSURE	NONE
e. COEFFICIENT OF SLIDING FRICTION	0.35

FOUNDATION NOTES

1. FOUNDATIONS HAVE BEEN DESIGNED IN ACCORDANCE WITH THE GEOTECHNICAL REPORT PREPARED BY GEOHYDRO ENGINEERS, DATED FEBRUARY 22, 2022 (GEO-HYDRO PROJECT NUMBER 211941.20). THE REPORT IS INCLUDED WITH THE PROJECT SPECIFICATIONS.
2. FOUNDATIONS HAVE BEEN DESIGNED TO BEAR ON SUBGRADE WITH AN ALLOWABLE SOIL BEARING PRESSURE OF 2500 PSF.
3. THE SPECIAL INSPECTOR OR PROJECT GEOTECHNICAL ENGINEER MUST INSPECT AND APPROVE FOUNDATION SUBGRADES PRIOR TO REBAR OR CONCRETE PLACEMENT. UNDERCUT ANY UNACCEPTABLE AREAS IDENTIFIED BY THE SPECIAL INSPECTOR, AND BACKFILL WITH APPROVED ENGINEERED FILL.
4. GEOTECHNICAL REPORT RECOMMENDS HOLDING AN ALLOWANCE FOR FOUNDATION SUBGRADE UNDERCUT/BACKFILL. CONTRACTOR'S BID MUST ACCOUNT FOR THIS WORK.
5. "DRAINAGE COURSE" GRANULAR LAYER BENEATH SLAB-ON-GRADE IS #57 STONE OR OTHER APPROVED OPEN-GRADED GRANULAR MATERIAL.
6. PREPARE SUBGRADES BENEATH THE BUILDING FOOTPRINT AS INDICATED IN THE GEOTECHNICAL REPORT AND THE SPECIFICATIONS.
7. NOTIFY THE STRUCTURAL ENGINEER OF RECORD IF UNDERGROUND OBSTRUCTIONS REQUIRING DESIGN MODIFICATION ARE DISCOVERED.
8. CONTRACTOR MUST PROVIDE PROPER DEWATERING AND BRACING OF EXCAVATIONS.
9. DO NOT POUR FOUNDATIONS OR SLAB UNTIL OTHER TRADES HAVE COORDINATED AND INSTALLED UNDERGROUND ROUGH-INS AND UTILITIES.

CONCRETE NOTES

1. CONCRETE WORK MUST CONFORM TO THE REQUIREMENTS OF ACI 318 "BUILDING CODE REQUIREMENTS FOR STRUCTURAL CONCRETE", AND ACI 301, "SPECIFICATIONS FOR STRUCTURAL CONCRETE FOR BUILDINGS."
2. SUBMIT MIX DESIGN TO A/E FOR REVIEW. CONCRETE IS NORMAL WEIGHT. MIX DESIGN PROPERTIES MUST BE:

ELEMENT	MIN f'c	MAX W/C	AIR
FOOTINGS	3000 PSI	0.50	AIR-ENTRAINED
COLUMN PEDESTALS	4500 PSI	0.45	AIR-ENTRAINED
CONCRETE PAVING		(SEE CIVIL DRAWINGS)	

3. REINFORCING STEEL MUST BE ASTM A615, GRADE 60, DEFORMED BARS.
4. AGGREGATE FOR NORMAL WEIGHT CONCRETE MUST CONFORM TO ALL REQUIREMENTS AND TESTS OF ASTM C33 AND THE PROJECT SPECIFICATIONS, INCLUDING ALKALI-SILICA REACTIVITY LIMITATIONS AND TESTING.
5. TIE ALL REINFORCING STEEL AND EMBEDDED ITEMS SECURELY IN PLACE PRIOR TO PLACING CONCRETE. PROVIDE SUFFICIENT SUPPORTS TO MAINTAIN THE POSITION OF REINFORCEMENT WITHIN SPECIFIED TOLERANCES DURING ALL CONSTRUCTION ACTIVITIES.
6. SPREAD OR OFFSET REINFORCING STEEL AS REQUIRED TO SUIT EMBEDDED ITEMS OR UTILITY PENETRATIONS. DO NOT CUT REINFORCING STEEL.
7. DO NOT WELD OR TACK WELD REINFORCING STEEL.
8. PROVIDE CONTINUOUS REINFORCEMENT UNLESS OTHERWISE NOTED. LAP SPLICE REINFORCING ONLY AS SHOWN OR APPROVED ON SHOP DRAWINGS. USE CLASS "B" TENSION LAP SPLICES CONFORMING WITH ACI 318 UNLESS NOTED OTHERWISE.
9. REINFORCING STEEL MUST HAVE THE FOLLOWING CONCRETE COVER, UNLESS OTHERWISE NOTED:

CONCRETE CAST AGAINST EARTH	3"
CONCRETE EXPOSED TO EARTH OR WEATHER:	
#6 BARS AND LARGER	2"
#5 BARS AND SMALLER	1 1/2"
CONCRETE NOT EXPOSED TO EARTH OR WEATHER	
SLABS AND WALLS	3/4"
BEAMS (STIRRUPS) AND PEDESTALS (TIES)	1 1/2"

PRE-ENGINEERED METAL BUILDING NOTES

1. THE BUILDING SUPERSTRUCTURE IS A PRE-ENGINEERED METAL BUILDING (PEMB). PEMB DESIGN IS DELEGATED TO THE CONTRACTOR, AND MUST BE DESIGNED BY A LICENSED PROFESSIONAL ENGINEER IN THE STATE OF GEORGIA, ACCORDING TO APPLICABLE BUILDING CODES, DESIGN CRITERIA SPECIFIED IN THESE DRAWINGS, AND THE METAL BUILDING MANUFACTURERS' ASSOCIATION (MBMA) METAL BUILDING SYSTEMS MANUAL, LATEST EDITION.
2. THE OVERALL DIMENSIONS, COLUMN LAYOUT, AND FRAMING SCHEME OF THE PEMB ARE INDICATED ON THE STRUCTURAL AND ARCHITECTURAL DRAWINGS. THE SELECTED PEMB MUST SUIT THE CONFIGURATION DEPICTED. IF DEVIATIONS ARE NECESSARY, SUBMIT PROPOSED MODIFICATION TO A/E FOR REVIEW PRIOR TO SHOP DRAWING DEVELOPMENT.
3. PEMB SCOPE IS INTENDED TO INCLUDE ALL FRAMING ELEMENTS ABOVE THE FINISHED FLOOR SLAB, SUCH AS RIGID FRAMES, WIND POSTS, CROSS-BRACING, SECONDARY GIRTS, ROOF JOISTS, EAVE STRUTS, INSULATED METAL PANEL WALL CLADDING, STEEL ROOF DECK, AND ALL ASSOCIATED CONNECTIONS AND ANCILLIARY MEMBERS. GENERAL CONTRACTOR COORDINATE TO ENSURE ALL STRUCTURAL ELEMENTS ARE PROVIDED.
4. SUBMIT PEMB SHOP DRAWINGS WITH ACCOMPANYING CALCULATIONS AND FOUNDATION REACTIONS FOR REVIEW.
5. COORDINATE ANCHOR BOLT DESIGN AND INSTALLATION BETWEEN THE PEMB SUPPLIER AND THE CONCRETE SUBCONTRACTOR. SELECT AND SUBMIT ANCHOR BOLT SIZE AND LAYOUTS WITH THE PEMB SHOP DRAWINGS. BUILDING FOUNDATIONS MUST NOT BE POURED UNTIL THE PEMB REACTIONS AND ANCHOR BOLTS HAVE BEEN SUBMITTED AND APPROVED. MINIMUM ANCHOR BOLT EMBEDMENT IS SHOWN ON THE STRUCTURAL DRAWINGS.
6. THE BUILDING FOUNDATIONS AND SLAB HAVE BEEN DESIGNED TO SUIT THE FOLLOWING CRITERIA AND ASSUMPTIONS:
   A. MAINFRAMES ARE CLEAR-SPAN RIGID FRAMES
   B. ALL MAINFRAMES AND COLUMNS MUST USE PINNED BASES (NO MOMENT FIXITY).
   C. COLUMNS BETWEEN END MAINFRAMES ARE NON-GRAVITY MEMBERS ("WIND POSTS")
   D. A COLLATERAL ROOF DEAD LOAD OF UP TO 10 PSF HAS BEEN USED
   E. HORIZONTAL LOADS PERPENDICULAR TO THE RIGID FRAMES MUST BE RESISTED BY PORTAL FRAMES, LOCATED AS REQUIRED BY THE PEMB DESIGNER.
   F. FUTURE EXPANSIONS OR ADDITIONS TO THE PEMB ARE NOT ACCOMMODATED.
7. GROUT UNDER PEMB BASEPLATES, WHERE USED, MUST BE NON-SHRINK TYPE. DO NOT GROUT BASEPLATES UNTIL AFTER STEEL IS PLUMBED.
8. ANCHORAGE OF PEMB TO THE FOUNDATION HAS BEEN EVALUATED FOR THE MAXIMUM REACTIONS BELOW, WHICH THE STRUCTURAL EOR HAS EVALUATED FOR THE PEMB CONFIGURATION. WHERE ACTUAL PEMB REACTIONS EXCEED THESE VALUES, CONTRACTOR MUST INFORM THE STRUCTURAL EOR TO RE-EVALUATE FOUNDATIONS. REACTIONS HAVE UNITS OF KIPS (k). THE HORIZONTAL THRUST REACTION (H-LAT) IS POSITIVE WHEN THE PEMB EXERTS A FORCE OUTWARD FROM THE BUILDING FACE, AND NEGATIVE WHEN THE FORCE IS INWARD. WIND AND SEISMIC VALUES ARE ULTIMATE (1.0W, 1.0E).

GRID	LOAD	P	U	H-LAT	H-LONG
C1.1, C11.9	DEAD + COLL	+8	-	±4	-
	ROOF LIVE	+8	-	±4	-
			-		-
	WIND	+6, -15	-	±2	±2
	SEISMIC	-	-	±2	±2
C2 TO C11	DEAD + COLL	+15	-	±6.5	-
	ROOF LIVE	+14	-	±6.5	-
			-		-
	WIND	+6, -15	-	±2	±2
	SEISMIC	-	-	±2	±2

NOTES:
1. 'H-LONG' ONLY OCCURS AT COLUMNS WITH CROSS-BRACING.

NOTE: COURT BUILDING, INCLUDING ALL FOUNDATION WORK SHOWN ON THIS SHEET, IS 'BID ALTERNATE 1'. SEE THE PROJECT SPECIFICATIONS.

BROCKENBROUGH
A Stratus Team Company

PRIME
A Stratus Team Company
3715 NORTHSIDE PARKWAY NW
400 NORTHCREEK, SUITE 200
ATLANTA, GEORGIA 30327
404-425-7100

PROJECT:
DALTON PICKLEBALL COMPLEX
904 CIVIC DRIVE,
DALTON, GA 30721

PREPARED FOR:
CITY OF DALTON, GA

REVISIONS

NO.	DATE	DESCRIPTION

SEAL
GEORGIA REGISTERED No. SE001397 STRUCTURAL ENGINEER DAVID S. CLARK
DATE: 08/09/2024

© 2024 PRIME ENGINEERING, INC. Scales, as stated hereon, are valid on the original drawing; the dimensions of which are 24 by 36 inches. These scales, noted hereon, are hereby changed by the ratio of the overall sheet dimensions of the print to corresponding dimensions of the original drawing. This drawing is the property of PRIME ENGINEERING, INCORPORATED and is not to be reproduced or copied in whole or in part. It is only to be used for the project and the specific purpose identified herein and is not to be used on any other project. It is to be returned upon request.

DRAWING TITLE
COURT COVERING STRUCTURAL NOTES

DRAWING DATE 08/09/2024	DRAWN BY DKW
DRAWING SCALE 12" = 1'-0"	DESIGNED BY DSC
PROJECT NUMBER 2024-0283	CHECKED BY DSC
DRAWING NUMBER S-600	Project Status

Autodesk Docs://Dalton - Pickleball/24-0283 STRUCT Dalton Pickleball VR22.rvt

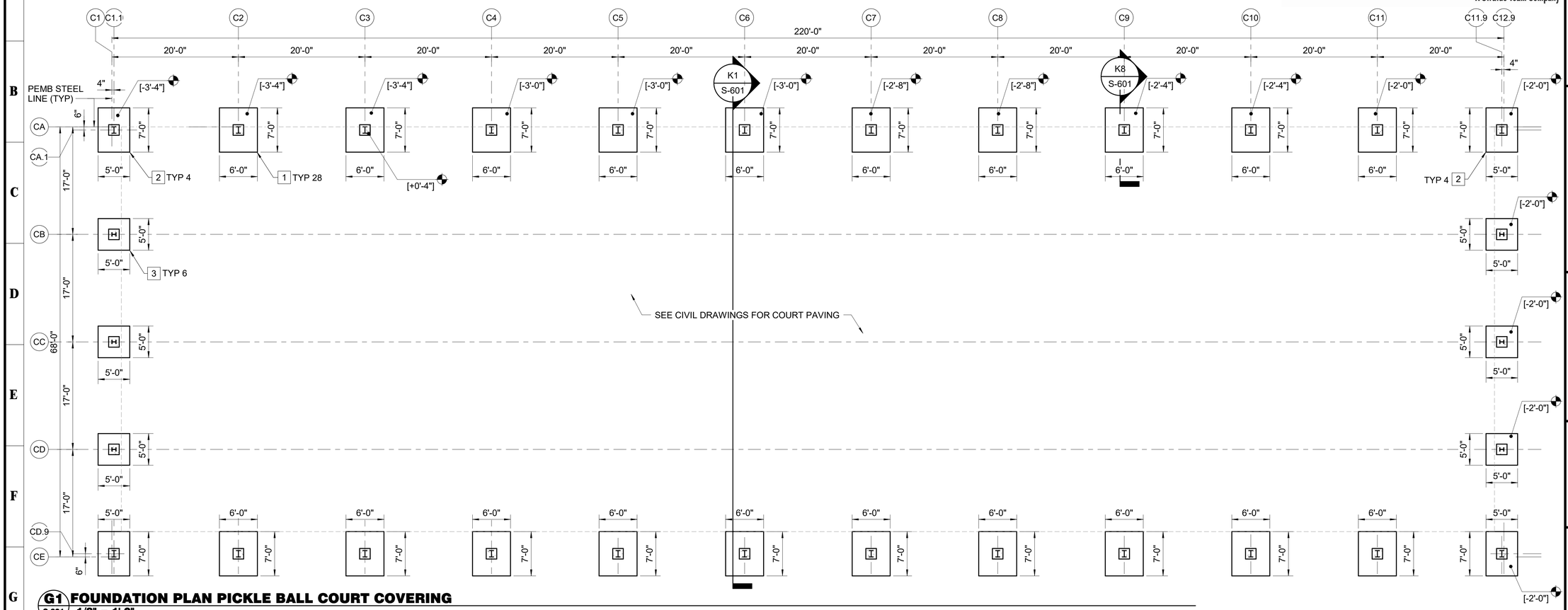

G1 FOUNDATION PLAN PICKLE BALL COURT COVERING

S-601 1/8" = 1'-0"

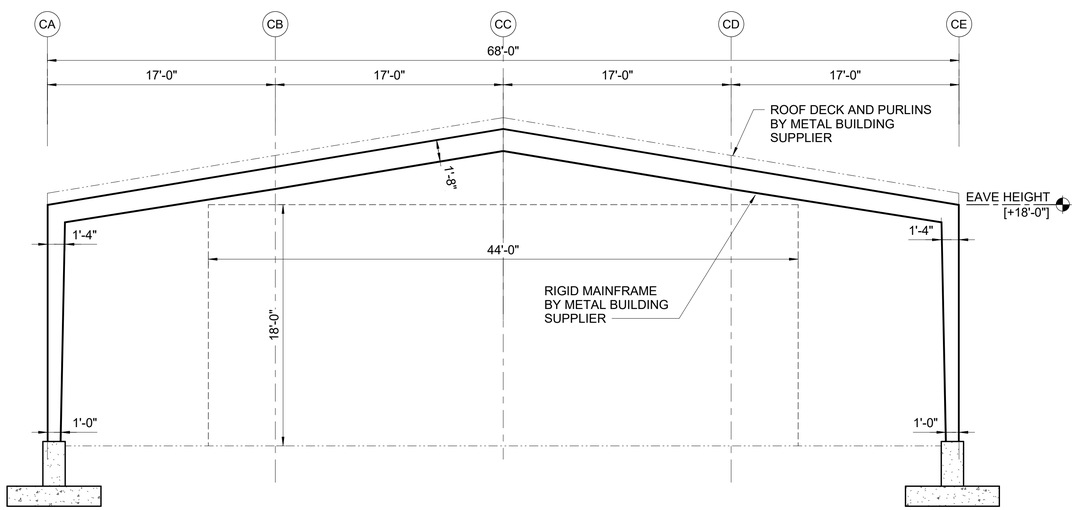

K1 TRANSVERSE BUILDING SECTION

S-601 3/16" = 1'-0"

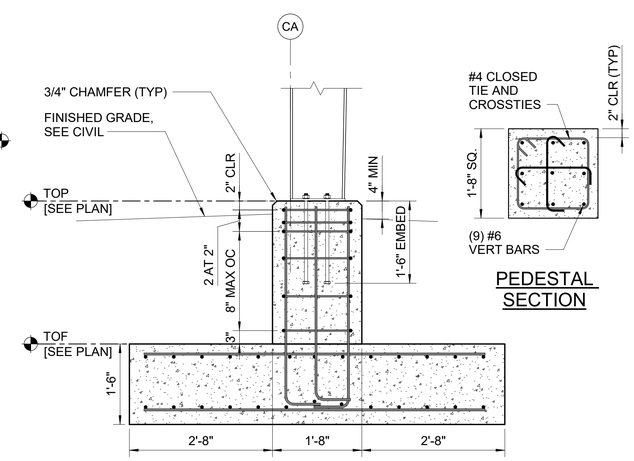

PEDESTAL SECTION

K8 SECTION

S-601 3/4" = 1'-0"

FOUNDATION PLAN NOTES

1. TOP OF GROUND FLOOR SLAB AT PLAN NORTHEAST CORNER IS REFERENCE ELEVATION [0'-0"]. SEE CIVIL DRAWINGS FOR ACTUAL ELEVATIONS.
2. TOPS OF FOOTINGS ARE SHOWN TO VARY ACROSS THE LENGTH OF THE BUILDING TO SUIT THE SITE SLOPE. CONTRACTOR MJUST COORDINATE SITE GRADING WITH FOOTING ELEVATIONS.
3. TOPS OF ALL CONCRETE PEDESTALS ARE CONSTANT TO SUIT CONSISTENT PEMB BEARING. CONTRACTOR COORDINATE BEARING ELEVATIONS WITH PEMB SUPPLIER. USE NON-SHRINK GROUT AS NECESSARY.

NOTE: COURT BUILDING, INCLUDING ALL FOUNDATION WORK SHOWN ON THIS SHEET, IS 'BID ALTERNATE 1'. SEE THE PROJECT SPECIFICATIONS.

KEYNOTES

1. MAINFRAME FOOTING REINFORCING:
   (11) #6 T&B LONG WAY, (13) #6 T&B SHORT WAY
2. CORNER FOOTING REINFORCING:
   (9) #6 T&B LONG WAY, (13) #6 T&B SHORT WAY
3. SIDE FOOTING REINFORCING: (9) #6 T&B EACH WAY

GRAPHIC SCALE(S)

3/4" = 1' - 0" 0 6" 1' 2' 3' 4' 5'

1/8" = 1' - 0" 0 5' 10' 15' 30'

BROCKENBROUGH
A Stratus Team Company

PRIME
A Stratus Team Company
3715 NORTHSIDE PARKWAY NW
400 NORTHCHEEKS, SUITE 200
ATLANTA, GEORGIA 30327
404-425-7100

PROJECT:
DALTON PICKLEBALL COMPLEX
904 CIVIC DRIVE,
DALTON, GA 30721

PREPARED FOR:
CITY OF DALTON, GA

REVISIONS

NO.	DATE	DESCRIPTION

SEAL

GEORGIA REGISTERED No. SE001397 STRUCTURAL ENGINEER DAVID S. CLARK

DATE: 08/09/2024

© 2024 PRIME ENGINEERING, INC. Scales, as stated hereon, are valid on the original drawing; the dimensions of which are 24 by 36 inches. These scales, noted hereon, are hereby changed by the ratio of the overall sheet dimensions of the print to corresponding dimensions of the original drawing. This drawing is the property of PRIME ENGINEERING, INCORPORATED and is not to be reproduced or copied in whole or in part. It is not to be used for any purpose other than that specifically identified herein and is not to be used on any other project. It is to be returned upon request.

DRAWING TITLE
COURT BUILDING FOUNDATION PLAN

DRAWN BY	DKW
DESIGNED BY	DSC
CHECKED BY	DSC
DRAWING DATE	08/09/2024
DRAWING SCALE	As indicated
PROJECT NUMBER	2024-0283
DRAWING NUMBER	S-601

Project Status

Autodesk Docs://Dalton - Pickleball/24-0283 STRUCT Dalton Pickleball VR22.rvt

GENERAL ELECTRICAL NOTES:

1. FOR EXACT LOCATION OF EQUIPMENT MOUNTED IN SUSPENDED CEILINGS. SUCH AS LIGHTING FIXTURES, AND SMOKE DETECTORS, SEE ARCHITECTURAL REFLECTED CEILING PLANS. ARCHITECTURAL REFLECTED PLAN SHALL GOVERN FINAL LOCATION.
2. PRIOR TO ROUGH–IN, CONTRACTOR SHALL COORDINATE EXACT LOCATION OF ALL WIRING DEVICE WITH ARCHITECTURAL ELEVATION TO AVOID CONFLICTS WITH CASEWORK, COUNTER TOPS, DOOR SWINGS, ETC. WHERE CONFLICTS OCCURS, CONTRACTOR SHALL CONTACT THE ARCHITECT IN WRITING FOR RESOLUTION.
3. ALL MOUNTING HEIGHT DIMENSIONS ARE TO THE CENTER OF THE OUTLET BOX UNLESS OTHERWISE NOTED.
4. FOR EXACT LOCATION OF ALL EXTERIOR LIGHTING FIXTURES MOUNTED ON EXTERIOR OF BUILDING, ARCHITECTURAL ELEVATIONS SHALL GOVERN
5. PRIOR TO ROUGH–IN FOR ALL LIGHTING SWITCHES, VERIFY ALL DOOR SWINGS WITH ARCHITECTURAL PLANS.
6. THE CONTRACTOR SHALL USE CARE WHEN CUTTING OPENINGS FOR OUTLET BOXES IN CMU WALLS. OUTLET BOXES SHALL BE INSTALLED IN CMU WALLS SECURELY WITH EPOXY.
7. THE CONTRACTOR IS RESPONSIBLE FOR COORDINATING OUTLET BOX INSTALLATION WITH WALL FINISH (GYPSUM FURRING, TILE, ETC). THE CONTRACTOR SHALL PROVIDE AND INSTALL ANY EXTENSION RINGS NECESSARY TO ACCOMMODATE WALL FINISHES.
8. ALIGN VERTICALLY AND HORIZONTALLY ALL LIGHT SWITCHES, THERMOSTATS, FIRE ALARM PULL STATIONS, ETC. ALL THESE ITEMS SHALL BE CLUSTERED WHERE POSSIBLE. COORDINATE EXACT REQUIREMENTS WITH ARCHITECT.
9. COORDINATE MOUNTING OF ALL EXTERIOR DISCONNECT WITH ARCHITECTURAL ELEVATIONS. IF NOT INDICATED ON ARCHITECTURAL ELEVATIONS, REQUEST ELEVATIONS OF DISCONNECT SWITCHES FROM ARCHITECT IN WRITING PRIOR TO ROUGH–IN.
10. ALL CONDUITS FOR LOW VOLTAGE OUTLETS SHALL BE DEDICATED TO A SINGLE BOX. NO DAISY CHAINING OR SHARING OF CONDUITS BETWEEN LOW VOLTAGE OUTLET BOXES IS PERMITTED UNLESS SPECIFICALLY INDICATED ON THE DRAWINGS.
11. PROVIDE FIELD IDENTIFICATION FOR PANELBOARDS AND SWTCHBOARDS (IF APPLICABLE) PER NEC 408.4. ADDITIONALLY, EACH RECEPTACLE AND DISCONNECT SHALL HAVE A PRINTED LABEL WITH SPECIFIC PANEL AND CIRCUIT NUMBER.
12. PROVIDE PERMANENT NAMEPLATE LABEL FOR PANELBOARDS IDENTIFYING COLOR CODING FOR BRANCH CIRCUITS, IN ACCORDANCE WITH NEC 210.5(C)(1).
13. PER NEC 406.12 PROVIDE TAMPER PROOF RECEPTACLES IN THE FOLLOWING AREAS: DWELLING UNITS, COMMON AREAS OF MULTIFAMILY DWELLINGS, GUEST ROOMS AND COMMON AREAS OF MOTELS/HOTELS, CHILDCARE FACILITIES, PRESCHOOLS AND EDUCATIONAL FACILITIES, DORMITORY UNITS, ASSISTED LIVING FACILITIES AND ASSEMBLY OCCUPANCIES PER SECTION 518.2. TAMPER PROOF RECEPTACLES ARE ALSO REQUIRED IN BUSINESS OFFICES, CORRIDORS AND WAITING ROOMS WITHIN CLINICS/MEDICAL OFFICES/DENTAL OFFICES/OUTPATIENT FACILITIES.
14. PER NEC 408.6, AVAILABLE FAULT CURRENT AND THE DATE THE CALCULATION WAS PERFORMED MUST BE FIELD MARKED ON THE ENCLOSURE AT THE POINT OF THE SUPPLY. THE MARKING MUST BE OF SUFFICIENT DURABILITY TO WITHSTAND THE ENVIRONMENT INVOLVED PER 110.24.

GENERAL ELECTRICAL DEMOLITION NOTES

1. ELECTRICAL CONTRACTOR SHALL REMOVE DEVICES ON WALLS TO BE REMOVED AND AS DIRECTED BY ARCHITECT.
2. ELECTRICAL CONTRACTOR SHALL REMOVE ALL ASSOCIATED WIRING, CONDUIT, SURFACE RACEWAY, ETC. FOR DEVICES/LOADS BEING REMOVED. ITEMS REMOVED SHALL BECOME PROPERTY OF THE ELECTRICAL CONTRACTOR (UON) AND SHALL BE REMOVED FROM THE SITE. ITEMS REMOVED SHALL NOT BE STORED AT THE SITE. UNDER NO CONDITIONS SHALL ITEMS REMOVED BE USED IN THE NEW CONSTRUCTION.
3. ELECTRICAL CONTRACTOR SHALL VISIT AND EXAMINE THE SITE PRIOR TO CONSTRUCTION TO ASCERTAIN THE EXISTING CONDITIONS AND LIMITS OF DEMOLITION AND CONSTRUCTION.
4. IT SHALL BE THE ELECTRICAL CONTRACTORS RESPONSIBILITY TO PROTECT AND RETAIN POWER TO ALL EXISTING ACTIVE EQUIPMENT TO REMAIN. THIS INCLUDES RE–ROUTING OF EXISTING CIRCUITING EFFECTED BY DEMOLITION.
5. ALL REMOVED COMPUTER EQUIPMENT SHALL BE TURNED OVER TO OWNER UNLESS DIRECTED TO DO OTHERWISE.
6. SEE MECHANICAL DRAWING FOR HEATERS, EXHAUST FANS, ETC., WHICH MUST BE DISCONNECTED BY THE ELECTRICAL CONTRACTOR FOR REMOVAL OR ABANDONMENT BY MECHANICAL CONTRACTOR. ELECTRICAL CONTRACTOR SHALL REMOVE ALL STARTERS, DISCONNECT SWITCHES AND ASSOCIATED CONDUIT AND WIRING.
7. REMOVE ALL CONDUIT, WIRE, BOXES AND FASTENING DEVICES AS REQUIRED TO AVOID ANY INTERFERENCE WITH NEW INSTALLATION.
8. CONDUITS MAY BE ABANDONED IN FLOOR AND WALLS ONLY. ELECTRICAL CONTRACTOR SHALL REMOVE ALL WIRING FROM ABANDONED CONDUITS, DISCONNECT FROM ALL POWER SOURCES AND PROVIDE BLANK PLATES ON ALL ABANDONED OUTLETS. CUT OFF ABANDONED CONDUITS 1" BELOW FINISHED FLOOR AND GROUT FLUSH. ABANDONED CONDUIT SHALL BE CAPPED AT BOTH ENDS.
9. ELECTRICAL CONTRACTOR SHALL TRACE ALL CIRCUITS IN EXISTING PANELS TO REMAIN AFFECTED BY DEMOLITION. TURN OFF AND TAG ALL UNUSED CIRCUIT BREAKERS AS AND LABEL AS "SPARE" AND TIGHTEN ALL CONNECTIONS. PROVIDE NEW TYPED DIRECTORY WITH DATE, PROTECTED BY PLASTIC AND PLACE IN COVER OF PANELS CONSISTENT WITH NEW CONSTRUCTION.
10. ANY ELECTRICAL OUTAGES REQUIRED BY THE WORK SHALL BE COORDINATED WITH OWNER'S REPRESENTATIVE AND CONFIRMED IN WRITING. ANY OUTAGE SHALL NOT BE SCHEDULED DURING NORMAL BUSINESS HOURS OR DURING FACILITY FUNCTIONS AND ALL COSTS FOR OVERTIME SHALL BE INCLUDED IN THE BID.
11. EXISTING LIGHTING FIXTURE BALLASTS AND FLUORESCENT LAMPS MAY CONTAIN PCB'S. DISPOSE OF BALLASTS AND LAMPS IN ACCORDANCE WITH EPA.
12. HOLES LEFT BY REMOVAL OF ELECTRICAL DEVICES, PANELS, ETC. SHALL BE PATCHED IN EXISTING WALLS TO REMAIN. REFER TO ARCHITECTURAL DRAWINGS.

ABBREVIATIONS

A	– AMPERES	MCB	– MAIN CIRCUIT BREAKER
A.F.F.	– ABOVE FINISHED FLOOR	MLO	– MAIN LUG ONLY
A.F.G.	– ABOVE FINISHED GRADE	NTS	– NOT TO SCALE
BFG	– BELOW FINISHED GRADE	P	– POLE
C	– CONDUIT	PNL	– PANEL
ETR	– EXISTING TO REMAIN	SN	– SOLID NEUTRAL
F	– FUSE	U.O.N.	– UNLESS OTHERWISE NOTED
GFI	– GROUND FAULT CIRCUIT INTERRUPTING	V	– VOLTS
G	– GROUND	W	– WIRE
KVA	– KILO VOLT AMP	WP	– WEATHERPROOF/GFI
KW	– KILOWATT		

UTILITY NOTES:

1. PRIOR TO ANY EXCAVATION, CONTRACTOR SHALL HAVE ALL EXISTING UNDERGROUND UTILITIES LOCATED.

FIRE PROOFING NOTES:

1. ELECTRICAL CONTRACTOR SHALL BE RESPONSIBLE FOR PROVIDING FIRE STOPPING AT ALL WALL, FLOOR AND CEILING PENETRATIONS WHERE CONDUIT PENETRATIONS OCCUR.
2. PROVIDE FIRE STOPPING AT CONDUIT PENETRATIONS PER UL.

DEVICE PLATE NOTE:

ALL COVERPLATES SHALL BE NYLON WITH FINISH PER ARCHITECT. ALL DEVICES (SWITCHES, RECEPTACLES, ETC) SHALL BE FINISH BY ARCHITECT (UON). COORDINATE WITH ARCHITECTURAL PLANS.

LIGHTING CONTROL COMMISSIONING:

COMMISSION ALL AUTOMATIC LIGHTING CONTROLS IN ACCORDANCE WITH THE 2015 IECC ENERGY CODE. COORDINATE TESTING WITH LIGHTING CONTROLS SUPPLIER.

WIRE SIZE CHART:

CONTRACTOR SHALL PROVIDE WIRING FOR 120V. CIRCUITS (LINE TO NEUTRAL) OF SIZES BELOW DEPENDING UPON CIRCUIT LENGTH BELOW:

< 100 FT	#12 AWG (CU)
100–160 FT	#10 AWG (CU)
160–250 FT	#8 AWG (CU)

ELECTRICAL LEGEND

LIGHTING

- LIGHTING FIXTURE
- EMERGENCY LIGHTING FIXTURE AND/OR NIGHTLIGHT AS INDICATED
- DOWNLIGHT.
- EXIT LIGHTING FIXTURE, FACE PLATES (DARKENED) AND DIRECTIONAL ARROWS AS INDICATED. PROVIDE WITH BATTERY BACKUP, UNO. CONNECT AHEAD OF LOCAL SWITCH.
- S — SINGLE POLE SWITCH, 20A, 120/277 VOLT, 46" A.F.F..
- S_3 — THREE–WAY SWITCH, 20A, 120/277 VOLT, 46" A.F.F..
- S_4 — FOUR–WAY SWITCH, 20A, 120/277 VOLT, 46" A.F.F..
- S_D — DIMMER SWITCH, 46" A.F.F. PROVIDE WATTAGE AS REQUIRED. PROVIDE DIMMER SWITCH COMPATIBLE WITH LED LIGHT FIXTURE. PROVIDE WIRING AS REQUIRED FROM DIMMER TO LIGHT FIXTURE. COORDINATE WITH FIXTURE MANUFACTURER.
- S_{OS} — WALL MOUNTED SWITCH, 20A, 120/277V, 46"AFF WITH INTEGRAL OCCUPANCY SENSOR. BY WATT STOPPER OR APPROVED EQUAL. PROVIDED WITH NUMBER OF SWITCH PACKS AS REQUIRED AND ALL OTHER REQUIRED ACCESSORIES FOR PROPER INSTALLATION.
- CEILING MOUNTED OCCUPANCY SENSOR. BY WATT STOPPER OR APPROVED EQUAL. PROVIDED WITH NUMBER OF SWITCH PACKS AS REQUIRED AND ALL OTHER REQUIRED ACCESSORIES FOR PROPER INSTALLATION.

POWER

- DUPLEX GROUNDING TYPE RECEPTACLE, 20A, 125 VOLT, NEMA 5–20R, 18" A.F.F., U.O.N..
- (2) DUPLEX GROUNDING TYPE RECEPTACLES IN COMMON BOX, 20A, 125 VOLT, NEMA 5–20R, 18" A.F.F, U.O.N
- ^{GFI} — DUPLEX GROUND FAULT INTERRUPTER TYPE RECEPTACLE, 20A, 125 VOLT, NEMA 5–20R, 18" A.F.F., U.O.N.
- ^{WP} — WEATHER RESISTANT RATED, DUPLEX GROUND FAULT INTERRUPTER TYPE RECEPTACLE, MOUNT HORIZONTALLY 18" A.F.F., U.O.N., IN CAST OUTLET BOX WITH GASKET DEVICE COVER.
- ^{EWC} — DUPLEX GROUNDING TYPE RECEPTACLE, 20A, 125 VOLT, NEMA 5–20R. MOUNT HORIZONTALLY 6" A.F.F. FOR WATER COOLER.
- PANELBOARD
- A–1 — ELECTRICAL CIRCUIT RUN IN CONDUIT AND CIRCUIT HOMERUN TO PANELBOARD (PANEL AND CIRCUIT DESIGNATION AS INDICATED). AS A MINIMUM CONDITION, EACH SINGLE PHASE CIRCUIT SHALL HAVE ONE #12 PHASE CONDUCTOR, ONE #12 NEUTRAL CONDUCTOR, AND ONE #12 GROUNDING CONDUCTOR (PLUS ONE INSULATED, ISOLATED GROUNDING CONDUCTOR WHEN SERVING ISOLATED GROUND TYPE DEVICES) IN 1/2" CONDUIT. PROVIDE ADDITIONAL PHASE CONDUCTORS AS REQUIRED FOR "MULTIPLE PHASED" ELECTRICAL LOADS. PROVIDE ADDITIONAL "SWITCH LEG" CONDUCTORS TO PROVIDE THE LIGHT FIXTURE CONTROL INDICATED. MULTIPLE SINGLE PHASE CONDUCTORS SHALL BE GROUPED TOGETHER IN A COMMON CONDUIT IN ACCORDANCE WITH THE NEC AND AT THE CONTRACTOR'S DISCRETION. MULTIPLE SINGLE PHASE CONDUCTORS SERVING ISOLATED GROUND RECEPTACLES SHALL NOT SHARE COMMON NEUTRALS. NEUTRAL AND GROUNDING CONDUCTORS SHALL BE SHARED AS ALLOWED BY THE NEC. BRANCH CIRCUIT CONDUCTORS IN CONDUIT SHALL BE RUN CONCEALED IN WALLS AND/OR ABOVE CEILINGS, IN/OR BELOW FLOORS, EXCEPT IN EXPOSED CONSTRUCTION AREAS. FLUORESCENT LIGHTING CIRCUITS SERVING SWITCHED FIXTURES WITH EMERGENCY BATTERY BACK–UP SHALL CONTAIN ONE UNSWITCHED CONDUCTOR. FLUORESCENT DIMMING CIRCUITS SERVING DIMMING BALLASTS SHALL BE PROVIDED WITH WIRING AS REQUIRED BY BALLAST MANUFACTURER. MULTIPLE PHASE LIGHTING CIRCUITS SERVING DIMMED LOADS SHALL NOT SHARE COMMON NEUTRALS.
- (J) — JUNCTION BOX.
- DISCONNECT SWITCH, 240 OR 600 VOLTS AS REQUIRED. AMPS, POLES AND FUSING AS NOTED, NEMA 1, U.O.N.
- S_M — MOTOR RATED SWITCH. MOUNT WITHIN SIGHT OF EQUIPMENT.
- MOTOR CONNECTION, WITH INTEGRAL DISCONNECTING MEANS.
- (1) — KEYNOTE.

WESTSIDE ENGINEERING WE # 24147
200 Galleria Parkway
Suite 1150
Atlanta, GA 30339
404-965-1287 tel
404-601-9859 fax
cesslinger@westside-engineering.com

LIGHTING FIXTURE SCHEDULE

TYPE	DESCRIPTION	MOUNT	VOLTAGE	LAMP QTY	LAMP WATTAGE/ TYPE	MANUFACTURER	CATALOG NUMBER	NOTES
A	1'X4' VANDAL RESISTANT LED LIGHT FIXTURE.	SURFACE	120	-	55W LED 4000K	KURTZON	XVL-S-1-1x4-2-LEDR-840-UNV-2	1
B	1'X4' STRIP - LENSED, 4000 LUMENS	SURFACE	120	-	35W LED 4000K	LITHONIA LIGHTING	CLX-L48-4000LM-SEF-FDL-MVOLT-GZ10-35K-80CRI-WH	1
C	8" LED DOWNLIGHT VANDAL RESISTANT FIXTURE.	RECESSED	120		21W LED 4000K	KURTZON	VL-PBD-4-8-DLM20-840-UNV-[BAFFLE]-[FINISH]	
WX	EXTERIOR WALLPACK WITH INTEGRAL PHOTOCELL AND INTEGRAL BATTERY BACK UP	WALL 8'-0" AFF	120	-	18W LED 4000K	LITHONIA LIGHTING	WDGE1-LED-P2-40K-80CRI-VF-MVOLT-PE-DDBXD	1
	EXIT SIGN, LED POLYCARBONATE BODY, RED LETTERING WITH CHEVRON ARROW(S) AS SHOWN WITH INTEGRAL BATTERY BACK-UP. VANDAL RESISTANT.	CEILING/ WALL	120		FURN WITH UNIT	EMERGENCY LIGHTS	VEX -HT-LR-1-W-AT	

NOTES:

1. PROVIDE WITH 90-MINUTE BATTERY BACKUP WHERE INDICATED ON DRAWINGS. LINEAR FIXTURES SHALL HAVE 600 LUMEN INVERTER. DOWNLIGHTS SHALL HAVE INTEGRAL TEST SWITCH.

COMcheck Software Version COMcheckWeb
Interior Lighting Compliance Certificate

Project Information

Energy Code: 2015 IECC
Project Title: 24147 - Dalton Pickleball
Project Type: New Construction

Construction Site: Owner/Agent: Designer/Contractor:

Additional Efficiency Package(s)

Credits: 1.0 Required 1.0 Proposed
Reduced Lighting Power, 1.0 credit

Allowed Interior Lighting Power

A Area Category	B Floor Area (ft2)	C Allowed Watts / ft2	D Allowed Watts
1-Common Space Types:Restrooms	1097	0.88	965
2-Common Space Types:Office - Enclosed	98	1.00	98
3-Common Space Types:Electrical/Mechanical	286	0.85	243
		Total Allowed Watts =	1306

Proposed Interior Lighting Power

A Fixture ID : Description / Lamp / Wattage Per Lamp / Ballast	B Lamps/ Fixture	C # of Fixture	D Fixture Watt.	E (C X D)
1-Common Space Types:Restrooms				
LED: A: 1'x4' LED LIGHT FIXTURE: Other:	1	14	55	770
LED: C: 8" LED DOWNLIGHT: Other:	1	6	21	126
2-Common Space Types:Office - Enclosed				
LED: A: 1'x4' LED LIGHT FIXTURE: Other:	1	2	55	110
3-Common Space Types:Electrical/Mechanical				
LED: A: 1'x4' LED LIGHT FIXTURE: Other:	1	3	55	165
LED: B: 1'x4' LED STRIP LIGHT FIXTURE: Other:	1	2	35	70
		Total Proposed Watts =		1241

Interior Lighting PASSES: Design 5% better than code

Interior Lighting Compliance Statement

Compliance Statement: The proposed interior lighting design represented in this document is consistent with the building plans, specifications, and other calculations submitted with this permit application. The proposed interior lighting systems have been designed to meet the 2015 IECC requirements in COM*check* Version COMcheckWeb and to comply with any applicable mandatory requirements listed in the Inspection Checklist.

Charles Esslinger — Name - Title
Signature
07/29/2024 — Date

Project Title: 24147 - Dalton Pickleball
Data filename:
Report date: 07/29/24
Page 1 of 4

PRIME
A Stratus Team Company
5115 NORTHSIDE PARKWAY NW
BUILDING 300, SUITE 200
ATLANTA, GEORGIA 30327
404-425-7100

PROJECT:
DALTON PICKLEBALL COMPLEX
904 CIVIC DR, DALTON, GA 30721
30721
PREPARED FOR:
CITY OF DALTON, GA

REVISIONS		
NO.	DATE	DESCRIPTION

SEAL: GEORGIA REGISTERED No. 027956 PROFESSIONAL ENGINEER CHARLES C ESSLINGER
DATE: 08/9/2024

© 2024 PRIME ENGINEERING, INC. Scales, as stated hereon, are valid on the original drawing; the dimensions of which are 24 by 36 inches. These scales, ratio of the overall dimensions of the print to corresponding dimensions of the original drawing. This drawing is the property of PRIME ENGINEERING, INCORPORATED and is not to be reproduced or copied in whole or in part. It is only to be used for the project and site specifically identified herein and is not to be used on any other project. It is to be returned upon request.

DRAWING TITLE
NOTES, DETAILS, AND LEGEND

DRAWN BY JER	DESIGNED BY JER
CHECKED BY JRW	
DRAWING DATE 08/9/2024	DRAWING SCALE
PROJECT NUMBER 2024-0283	DRAWING NUMBER E000

ISSUED FOR CONSTRUCTION

C:\Users\Chris\Westside Engineering Dropbox\Westside Engineering Team Folder\2024\24147 - Dalton Pickleball\Arch\Bord 24x36.DWG Tue, 07/09/24 10:45 PM

WESTSIDE ENGINEERING
WE # 24147
200 Galleria Parkway
Suite 1150
Atlanta, GA 30339
404-965-1287 tel
404-601-9859 fax
cesslinger@westside-engineering.com

PANELBOARD SCHEDULE MDP

MAIN: 600 A MLO | VOLTAGE: 240/120 1 PHASE 3 WIRE | AIC 42,000 | MOUNTING: SURFACE

CKT #	DESCRIPTION	LOAD (KVA) LTG	REC	MTR	A/C	HTG	KIT	WH/EV	NON CON	BKR TYP	TRIP/POLE	PHASE	TRIP/POLE	BKR TYP	LOAD (KVA) LTG	REC	MTR	A/C	HTG	KIT	WH/EV	NON CON	DESCRIPTION	CKT #
1	TBB RECEPT		0.4								20/1	A	20/1			0.7							OFFICE RECEPT	2
3	CHANGING STATION PWR		0.9								20/1	B	20/1	GF		0.5							EWC	4
5	ELECT. RM / WOMEN RR. RECEPT		0.7								20/1	A	50/2								4.5		WH-1	6
7	WOMEN RR. / EXT. RECEPT		0.7								20/1	B	---								4.5		---	8
9	CH-A (WOMEN RR)					5.1					30/1	A	20/1			0.7							MEN RR / CONCESS / EXT RECEPT	10
11	CH-A (WOMEN RR)					5.1					30/1	B	20/1			0.5							CONCESSION RECEPT	12
13	EF-1 / EF-2			1.4							15/1	A	20/1			0.5							CONCESSION RECEPT	14
15	CH-A (FAMILY RR)					5.1					30/1	B	20/1	GF		0.8							REFRIGERATOR RECEPT	16
17	EWH-A					1.5					20/2	A	30/1						5.1				CH-A (MEN RR)	18
19	---					1.5					---	B	30/1						5.1				CH-A (MEN RR)	20
21	DFC-1,2, DCU-1				1.6						25/2	A	20/1		0.7								OFFICE / RESTROOM LTG	22
23	---				1.6						---	B	20/1		0.6								RESTROOM / CONCESSION LTG	24
25	DFC-3,4, DCU-2				1.6						25/2	A	20/2		0.5								PARKING LOT LIGHTING	26
27	---				1.6						---	B	---		0.5								---	28
29	EXTERIOR CEILING FANS			0.1							20/1	A	20/2		0.7								EXTERIOR LIGHTING	30
31	COURT LIGHTING	1.0									20/2	B	---		0.7								---	32
33	---	1.0									---	A	20/1										SPARE	34
35	SPARE										20/1	B	20/1										SPARE	36
37	SPARE										20/1	A	20/1										SPARE	38
39	SPARE										20/1	B	20/1										SPARE	40
41	SPARE										20/1	A	20/1										SPARE	42
	SECTION 2																							
43	COURT LIGHTING	1.0									20/2	A	20/2		1.0								COURT LIGHTING	44
45	---	1.0									---	B	---		1.0								---	46
47	COURT LIGHTING	1.0									20/2	A	20/2		1.0								COURT LIGHTING	48
49	---	1.0									---	B	---		1.0								---	50
51	COURT LIGHTING	1.0									20/2	A	20/2		1.0								COURT LIGHTING	52
53	---	1.0									---	B	---		1.0								---	54
55	COURT LIGHTING	1.0									20/2	A	20/2		1.0								COURT LIGHTING	56
57	---	1.0									---	B	---		1.0								---	58
59	COURT LIGHTING	1.0									20/2	A	20/2		1.0								COURT LIGHTING	60
61	---	1.0									---	B	---		1.0								---	62
63	COURT LIGHTING	1.0									20/2	A	20/2		1.0								COURT LIGHTING	64
65	---	1.0									---	B	---		1.0								---	66
67	COURT LIGHTING	1.0									20/2	A	20/1										SPARE	68
69	---	1.0									---	B	20/1										SPARE	70
71	COURT LIGHTING	1.0									20/2	A	20/1										SPARE	72
73	---	1.0									---	B	20/1										SPARE	74
75	SPARE										20/1	A	20/1										SPARE	76
77	SPARE										20/1	B	20/1										SPARE	78
79	SPARE										20/1	A	20/1										SPARE	80
81	SPARE										20/1	B	20/1										SPARE	82
83	SPARE										20/1	A	20/1										SPARE	84

LIGHTING:	33.7 (KVA)	CONNECTED LOAD (KVA):	85.5
RECEPTACLES:	6.4	DEMAND LOAD (KVA):	96.2
MOTORS:	1.5		
A/C:	6.4		
HEATING:	28.5	CONNECTED LOAD (AMPS):	356.3
KITCHEN:	0.0	DEMAND LOAD (AMPS):	400.7
WATER HEATER/EV CHARGER:	9.0		
DEDICATED/NONCONTINUOUS:	0.0	PANEL AMPACITY REQUIRED:	400.7

DEMAND PER PHASE (AMPS)	384.6	A
	416.9	B
CONNECTED PER PHASE (AMPS)	340.0	A
	372.5	B

NOTES:

BREAKER TYPES: G=GFCI, A=AFCI, SH=SHUNT TRIP, SW=SWITCHED NEUTRAL

HVAC NOTE: DESIGN BASIS EQUIPMENT FOR THIS PROJECT USES A1 TYPE REFRIGERANTS, INCLUDING R410A. CURRENT REFRIGERANT RULES FROM THE EPA IMPOSES RESTRICTIONS ON A1 TYPE REFRIGERANTS, INCLUDING EQUIPMENT MANUFACTURED AFTER 1/1/2025 OR INSTALLED AFTER 1/1/2026. IF CONSTRUCTION RESULTS IN EQUIPMENT CHANGES TO A2L TYPE REFRIGERANT, THERE WILL BE CHANGES REQUIRED TO MEET ASHRAE 15-2022, INCLUDING EQUIPMENT, CONTROLS, ELECTRICAL AND SAFETY REQUIREMENTS.

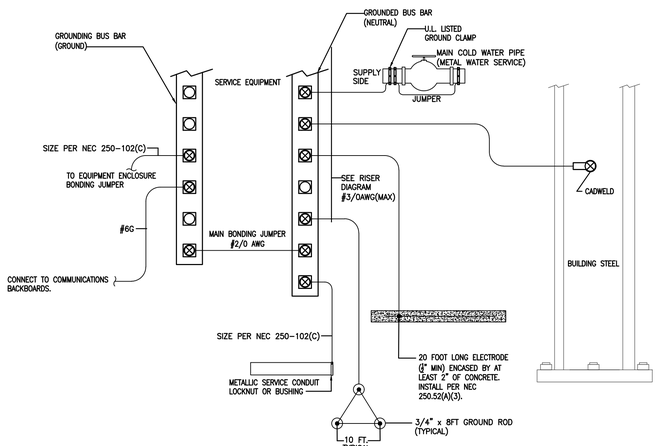

2 SERVICE GROUNDING DETAIL
E001 NTS

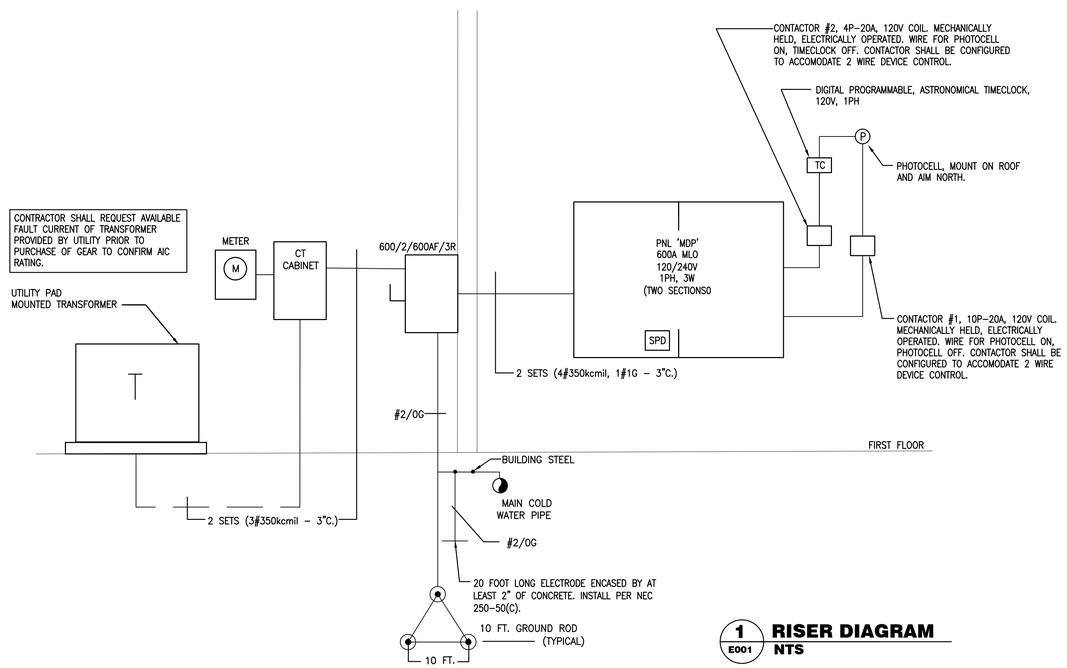

1 RISER DIAGRAM
E001 NTS

PRIME
A Stratus Team Company
5715 NORTHSIDE PARKWAY NW
BUILDING 400, SUITE 200
ATLANTA, GEORGIA 30327
404-425-7100

PROJECT:
DALTON PICKLEBALL COMPLEX
904 CIVIC DR, DALTON, GA 30721
30721
PREPARED FOR:
CITY OF DALTON, GA

REVISIONS

NO.	DATE	DESCRIPTION

SEAL

GEORGIA REGISTERED No. 027956 PROFESSIONAL ENGINEER CHARLES C ESSLINGER

DATE: 08/9/2024

© 2024 PRIME ENGINEERING, INC. Scales, as stated hereon, are valid on the original drawing; the dimensions of which are 24 by 36 inches. These scales, noted hereon, are invalid if changed by the print shop and/or if the dimensions of the print to corresponding dimensions of the original drawing. This drawing is the property of PRIME ENGINEERING, INCORPORATED and is not to be reproduced or copied in whole or in part. It is only to be used for the project and site specifically identified herein and is not to be used on any other project. It is to be returned upon request.

DRAWING TITLE
ELECTRICAL RISER AND PANEL SCHEDULE

DRAWING DATE	08/9/2024
DRAWING SCALE	
DRAWN BY	JER
DESIGNED BY	JER
CHECKED BY	JRW
PROJECT NUMBER	20240283
DRAWING NUMBER	E001

ISSUED FOR CONSTRUCTION

C:\Users\Chris\Westside Engineering Dropbox\Westside Engineering Team Folder\2024\24147 - Dalton Pickleball\Arch\Bord 24x36.DWG Tue, 07/09/24 10:45 PM

WESTSIDE ENGINEERING
WE # 24147
200 Galleria Parkway
Suite 1150
Atlanta, GA 30339
404-965-1287 tel
404-601-9859 fax
cesslinger@westside-engineering.com

LIGHTING FIXTURE SCHEDULE

TYPE	DESCRIPTION	MOUNT	VOLTAGE	LAMP QTY	LAMP WATTAGE/ TYPE	MANUFACTURER	CATALOG NUMBER	NOTES
P1	SITE POLE LIGHTING; SINGLE HEAD, TYPE 4M DISTRIBUTION. FINISH BY ARCHITECT.	POLE 23'-0"	240	-	517LED 4000K	CENTER COURT LIGHTING	CTA-L-C-80L-T4T-1-BK	1
P2	SITE POLE LIGHTING; TWIN HEADS, TYPE 4M DISTRIBUTION. FINISH BY ARCHITECT.	POLE 23'-0"	240	2	517LED 4000K	CENTER COURT LIGHTING	CTA-L-C-80L-T4T-1-BK	1
P3	LED AREA LIGHTING AND POLE. FINISH BY ARCHITECT.	POLE 14'-0"	240		30LED 4000K	HOLOPHANE	LIGHT FIXTURE: AWDE3 P30 40K MVOLT LS AL3 GN FNT ST TGN PR7 NL1X1 POLE: NYA 14 SL5 17S C03 GN ABG RP120D FGIUS GN ASSY5418	1
P4	SITE POLE LIGHTING; SINGLE HEAD, TYPE R4 DISTRIBUTION WITH HOUSESIDE SHIELD. FINISH BY ARCHITECT.	POLE 21'-0"	240		189.54W LED 4000K	LITHONIA LIGHTING	RSX2 LED P4 40K R4 HS	1

NOTES:

1. REFER TO POLE BASE DETAIL, THIS SHEET.

SITE LIGHTING SUBMITTALS WITH FIXTURES OTHER THAN SPECIFIED SHALL BE ACCOMPANIED BY PHOTOMETRIC CALCULATIONS PERFORMED WITH SUBMITTED FIXTURES.

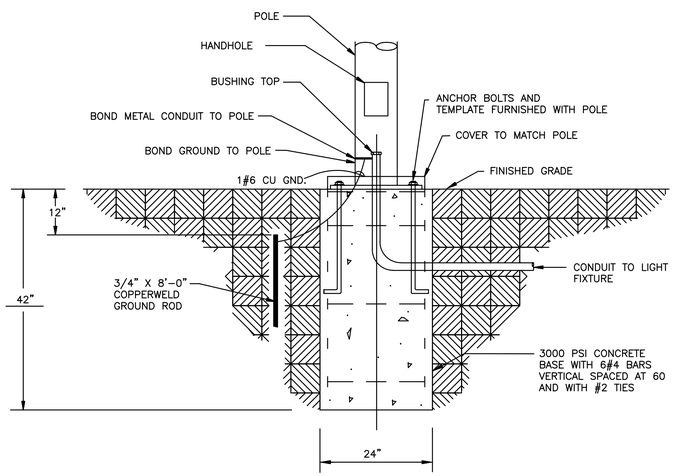

2 / E101 POLE BASE DETAIL
NTS

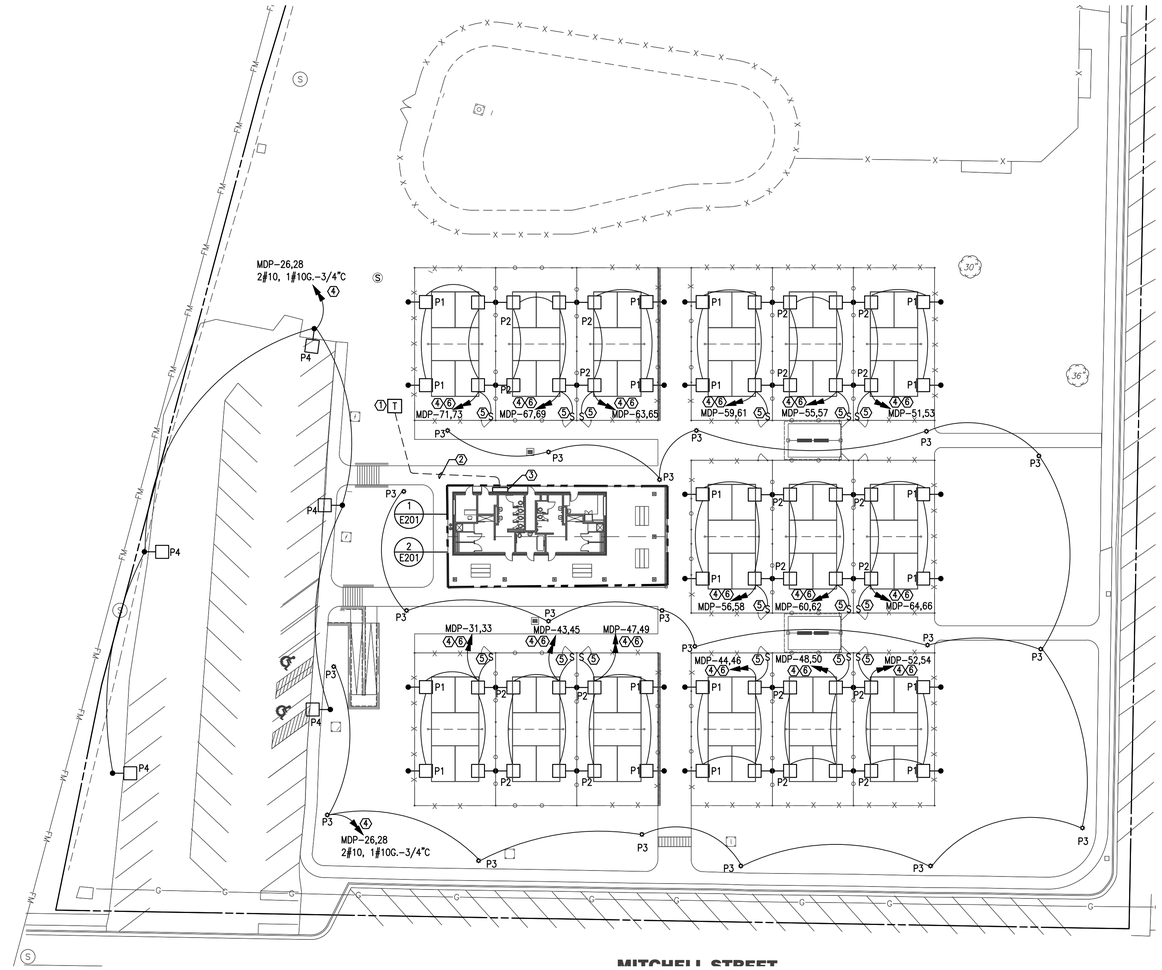

1 / E101 SITE - ELECTRICAL PLAN
1" = 30'-0"

KEYNOTES:

1. APPROXIMATE LOCATION OF UTILITY PAD MOUNTED TRANSFORMER.
2. SECONDARY CONDUIT AND WIRING PER POWER RISER DIAGRAM, 1/E001
3. APPROXIMATE LOCATION OF ELECTRICAL METER, CT CABINET AND DISCONNECT.
4. ROUTE CIRCUIT THROUGH EXTERIOR CONTACTOR FOR PHOTOCELL/TIMECLOCK CONTROL.
5. MANUAL CONTROL TIMER SWITCH FOR COURT LIGHTING. COORDINATE EXACT LOCATION AND REQUIREMENTS WITH ARCHITECT.
6. CONNECT TO PANEL INDICATED VIA 2#10, 1#10G.-3/4"C.

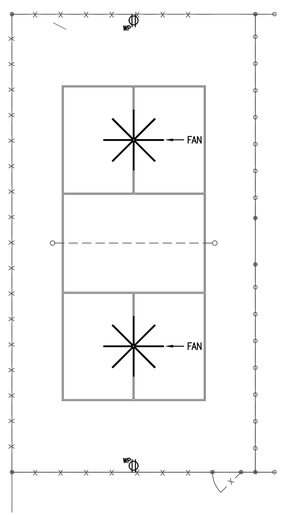

3 / E101 COVERED COURT LAYOUT - TYPICAL OF 6 (BID ALTERNATE 1)
1" = 10'-0"

BID ALTERNATE 1 – GENERAL NOTES:

1. THE CONTRACTOR SHALL PROVIDE LIGHTING DESIGN AND LIGHTING FOR THE COVERED AREA. COVERED AREA SHALL INCLUDE THE FOLLOWING ITEMS AS BID ALTERNATE 1:
   - 1.1. INTERIOR COURT LIGHTING
   - 1.2. (2) FANS MOUNTED ABOVE EACH COURT. PROVIDE VARIABLE SPEED CONTROL SWITCH FOR EACH FAN. (TOTAL OF 12 FANS/SWITCHES).
   - 1.3. (2) WEATHERPROOF RECEPTACLES PER COURT. (TOTAL OF 12 RECEPTACLES).
   - 1.4. PROVIDE NEC COMPLIANT CIRCUITING FROM PANEL 'MDP' TO COURT LIGHTING, FANS, AND RECEPTACLES.

PRIME
A Stratus Team Company
5115 NORTHSIDE PARKWAY NW
BUILDING 400, SUITE 200
ATLANTA, GEORGIA 30327
404-425-7100

PROJECT:
DALTON PICKLEBALL COMPLEX
904 CIVIC DR, DALTON, GA 30721
30721
PREPARED FOR:
CITY OF DALTON, GA

REVISIONS		
NO.	DATE	DESCRIPTION

SEAL: GEORGIA REGISTERED No. 027956 PROFESSIONAL ENGINEER CHARLES C ESSLINGER

DATE: 08/9/2024

© 2024 PRIME ENGINEERING, INC. Scales, as stated hereon, are valid on the original drawing; the dimensions of which are 24 by 36 inches. These scales, noted or hereon, are hereby changed by the ratio of the overall sheet dimensions of the print to corresponding dimensions of the original drawing. This drawing is the property of PRIME ENGINEERING, INCORPORATED and is not to be reproduced or copied in whole or in part. It is only to be used for the project and site specifically identified herein and is not to be used on any other project. It is to be returned upon request.

DRAWING TITLE: SITE - ELECTRICAL PLAN

DRAWN BY	JER
DESIGNED BY	JER
CHECKED BY	JRW
DRAWING DATE	08/9/2024
DRAWING SCALE	
PROJECT NUMBER	2024-0283
DRAWING NUMBER	E101

ISSUED FOR CONSTRUCTION

C:\Users\Chris\Westside Engineering Dropbox\Westside Engineering Team Folder\2024\24147 – Dalton Pickleball\Arch\Bord 24x36.DWG Tue, 07/09/24 10:45 PM

WESTSIDE ENGINEERING
WE # 24147
200 Galleria Parkway
Suite 1150
Atlanta, GA 30339
404-965-1287 tel
404-601-9859 fax
cesslinger@westside-engineering.com

PRIME
A Stratus Team Company
5715 NORTHSIDE PARKWAY NW
BUILDING 300, SUITE 200
ATLANTA, GEORGIA 30327
404-425-7100

Statistics

Description	Symbol	Avg	Max	Min	Max/Min	Avg/Min
Property Line	+	0.2 fc	2.0 fc	0.0 fc	N/A	N/A
Setback From PL	+	0.5 fc	7.8 fc	0.0 fc	N/A	N/A
Typical Court Lighting	+	62.1 fc	101.7 fc	1.9 fc	53.5:1	32.7:1
Parking Lot	×	3.9 fc	7.8 fc	0.4 fc	19.5:1	9.8:1

Schedule

Symbol	Label	Mounting Height	Catalog	QTY	Manufacturer	Description	Number Lamps	Lamp Output	LLF	Input Power
	P1	23'-0" AFG	KTNL C 80L T4T	2	www.TECHLIGHT.com	Katen LED Parking Roadway Luminaire	1	79698	0.9	517
	P2	23'-0" AFG	KTNL C 80L T4T	2	www.TECHLIGHT.com	Katen LED Parking Roadway Luminaire	1	79698	0.9	517
	P3	14'-0" AFG	AWDE3 P30 40K XXXX AL3	20	Holophane	Acrylic Washington Gen3, P30 performance package, 4000K CCT 70CRI, Refractive Acrylic Optic with Type 3 distribution	1	9016	0.9	61
	P4	24'-0" AFG	RSX2 LED P4 40K R4 HS	5	Lithonia Lighting	RSX LED Area Luminaire Size 2 P4 Lumen Package 4000K CCT Type R4 Distribution with HS shield	1	16647	0.9	189.54

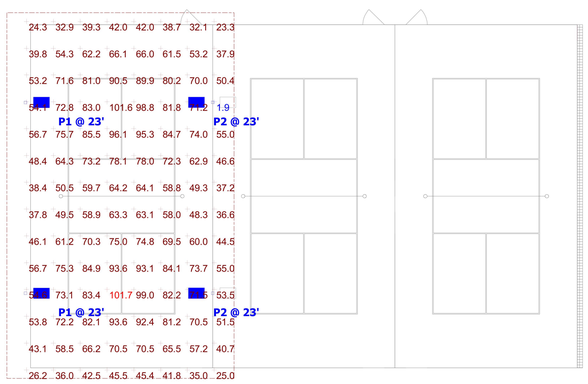

Plan View - SCALE: 1" = 20'-0"

2 / E101 TYPICAL COURT LIGHTING - PHOTOMETRICS PLAN
1" = 20'-0"

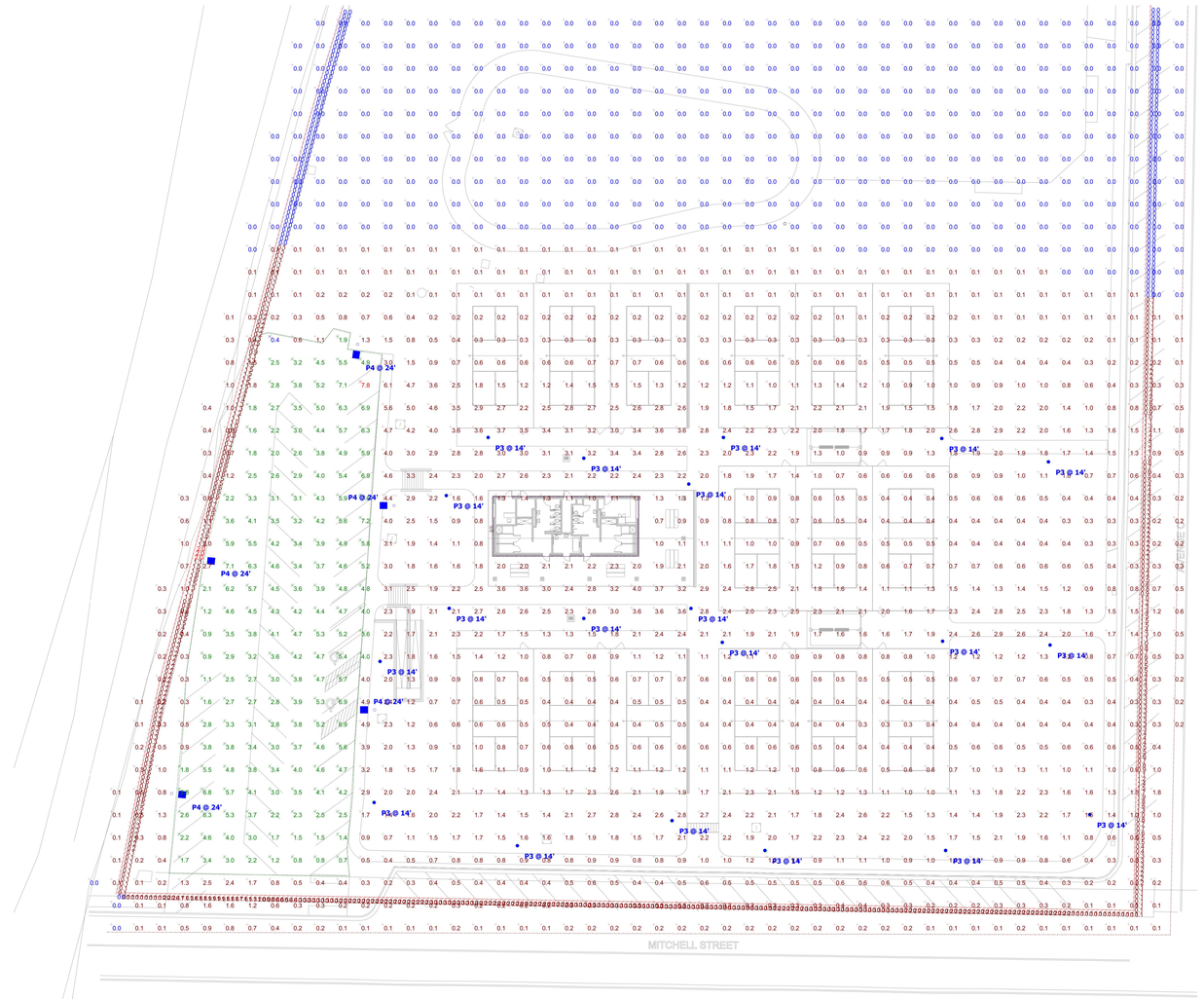

Plan View - SCALE: 1" = 30'-0"

1 / E102 SITE - PHOTOMETRICS PLAN
1" = 30'-0"

PROJECT:
DALTON PICKLEBALL COMPLEX
904 CIVIC DR, DALTON, GA 30721
30721
PREPARED FOR:
CITY OF DALTON, GA

REVISIONS

NO.	DATE	DESCRIPTION

SEAL

GEORGIA REGISTERED No. 027956 PROFESSIONAL ENGINEER CHARLES C ESSLINGER

DATE: 08/9/2024

© 2024 PRIME ENGINEERING, INC. Scales, as stated hereon, are valid on the original drawing: the dimensions of which are 24 by 36 inches. These scales, noted hereon, are hereby changed by the ratio of the overall size of the drawing as compared to the original drawing. This drawing is the property of PRIME ENGINEERING, INCORPORATED and is not to be reproduced or copied in whole or in part. It is only to be used for the project and site specifically identified herein and is not to be used on any other project. It is to be returned upon request.

DRAWING TITLE

SITE - PHOTOMETRICS PLAN

DRAWING DATE 08/9/2024	DRAWN BY JER
DRAWING SCALE	DESIGNED BY JER
PROJECT NUMBER 2024-0283	CHECKED BY JRW
DRAWING NUMBER E102	ISSUED FOR CONSTRUCTION

C:\Users\Chris1\Westside Engineering Dropbox\Westside Engineering Team Folder\2024\24147 - Dalton Pickleball\Arch\Bord 24x36.DWG Tue, 07/09/24 10:45 PM

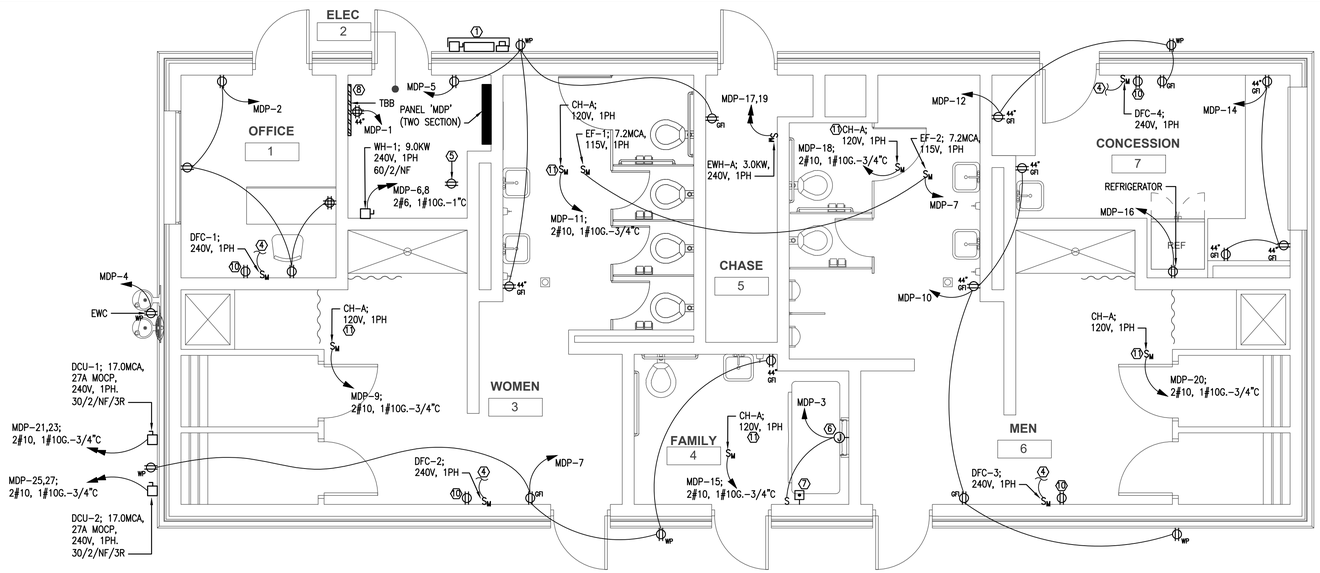

1 POWER PLAN
E201 1/4" = 1'-0"

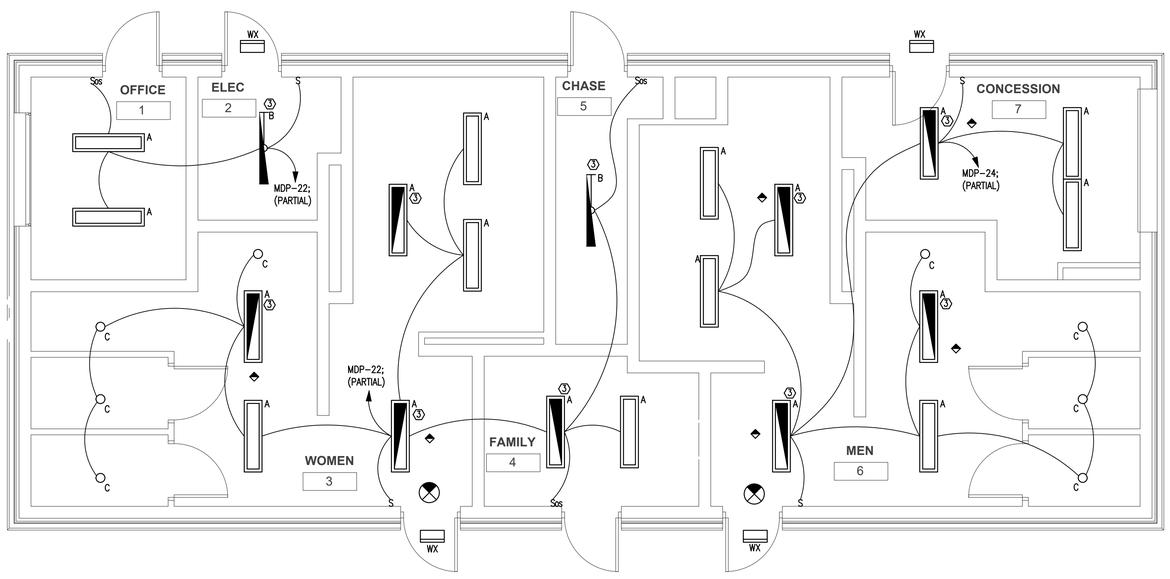

2 LIGHTING PLAN
E201 1/4" = 1'-0"

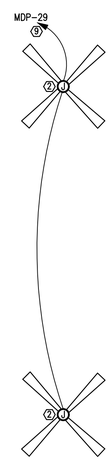

WESTSIDE ENGINEERING
WE # 24147
200 Galleria Parkway
Suite 1150
Atlanta, GA 30339
404-965-1287 tel
404-601-9859 fax
cesslinger@westside-engineering.com

GENERAL NOTES:

1. PULL AN UNSWITCHED PHASE CONDUCTOR FROM LOCAL AREA LIGHTING CIRCUIT TO ALL EMERGENCY AND EGRESS LIGHT FIXTURES.

KEYNOTES:

1. SERVICE METER, CT CABINET AND DISCONNECT LOCATION.
2. PROVIDE JUNCTION BOX WITH STRUCTURAL SUPPORT FOR CEILING FAN INSTALLATION.
3. FIXTURE SUPPLIED WITH EMERGENCY BATTERY PACK. ALL FIXTURE LAMPS SHALL BE SWITCHED ON/OFF. EMERGENCY BATTERY PACK SHALL BECOME ENERGIZED UPON LOSS OF CIRCUIT POWER.
4. CONNECT TO ASSOCIATED CONDENSING UNIT PER MANUFACTURER'S RECOMMENDATIONS IN 3/4"C.
5. HWRP-1; 120V, 1PH. CONNECT TO NEAREST AVAILABLE 120V CIRCUIT.
6. CHANGING STATION; 120V, 1PH. COORDINATE EXACT REQUIREMENTS AND LOCATION OF EPO BUTTON WITH EQUIPMENT INSTALLER.
7. EMERGENCY POWER OFF (EPO) BUTTON. PROVIDE CONNECTION TO CHANGING STATION AS REQUIRED. COORDINATE EXACT LOCATION AND MOUNTING HEIGHT OF EPO BUTTON WITH EQUIPMENT INSTALLER.
8. PROVIDE GROUND BUS WITH #6G TO MAIN ELECTRICAL SERVICE GROUND. PROVIDE (2) 4"C WITH PULLWIRE TO PROPERTY LINE FOR LOW VOLTAGE SERVICE.
9. ROUTE CIRCUIT INDICATED THROUGH EXTERIOR LIGHTING CONTACTOR FOR TIMECLOCK CONTROL.
10. CONDENSATE PUMP; 120V, 1PH. PROVIDE RECEPTACLE AND CONNECT TO NEAREST AVAILABLE 120V CIRCUIT.
11. INTEGRAL DISCONNECT PROVIDED WITH EQUIPMENT.

PRIME
A Stratus Team Company
5715-NORTHSIDE PARKWAY NW
BUILDING 400, SUITE 200
ATLANTA, GEORGIA 30327
404-425-7100

PROJECT:
DALTON PICKLEBALL COMPLEX
904 CIVIC DR, DALTON, GA 30721
30721

PREPARED FOR:
CITY OF DALTON, GA

REVISIONS

NO.	DATE	DESCRIPTION

SEAL

GEORGIA REGISTERED No. 027956 PROFESSIONAL ENGINEER CHARLES C ESSLINGER

DATE: 08/9/2024

© 2024 PRIME ENGINEERING, INC. Scales, as stated hereon, are valid on the original drawing; the dimensions of which are 24 by 36 inches. These scales, noted or shown, are hereby changed by the ratio of the overall dimensions of the print to corresponding dimensions of the original drawing. This drawing is the property of PRIME ENGINEERING, INCORPORATED and is not to be reproduced or copied in whole or in part. It is only to be used for the project and site specifically identified herein and is not to be used on any other project. It is to be returned upon request.

DRAWING TITLE
POWER AND LIGHTING PLAN

DRAWING DATE 08/9/2024	DRAWN BY JER		
DRAWING SCALE	DESIGNED BY JER		
PROJECT NUMBER 2024-0253	CHECKED BY JRW		
DRAWING NUMBER **E201**			

ISSUED FOR CONSTRUCTION

C:\Users\Chris\Westside Engineering Dropbox\Westside Engineering Team Folder\2024\24147 - Dalton Pickleball\Arch\Bord 24x36.DWG Tue, 07/09/24 10:45 PM

GENERAL NOTES:

1. DRAWINGS ARE SCHEMATIC IN NATURE. CONTRACTOR SHALL PROVIDE ALL MATERIALS, EQUIPMENT, TOOLS AND LABOR NECESSARY TO PROVIDE A COMPLETE MECHANICAL SYSTEM COMPLIANT WITH ALL REQUIRED CODES & STANDARDS.
2. CONTRACTOR SHALL VISIT THE SITE TO THOROUGHLY EXAMINE EXISTING CONDITIONS PRIOR TO SUBMITTING BID. IF EXISTING CONDITIONS DIFFER FROM DESIGN DOCUMENTS IN SUCH A MANNER THAT AFFECTS PRICING, THE CONTRACTOR SHALL ADJUST THE BID ACCORDINGLY AND NOTIFY THE OWNER & ENGINEER PRIOR TO SUBMITTING THE BID. NO ALLOWANCES WILL BE MADE FOR LACK OF KNOWLEDGE REGARDING THE EXISTINNG CONDITIONS.
3. ALL RETURN AIR AND TRANSFER AIR DUCTS SHALL BE LINED WITH 1" THICK DUCT LINER.
4. PROVIDE NEW, 7-DAY PROGRAMMABLE THERMOSTAT INCLUDING PROGRAMMABLE OCCUPANCY SETTINGS FOR EACH RTU. ALL LOW VOLTAGE CONTROL WIRING SHALL BE INSTALLED AND WIRED TO EQUIPMENT AS A PART OF THIS CONTRACT.
5. ALL LOW VOLTAGE CONTROL WIRING SHALL BE INSTALLED AND WIRED TO EQUIPMENT AS A PART OF THIS CONTRACT.
6. ALL HVAC DUCT WORK SHALL BE INDEPENDENTLY SUPPORTED FROM ROOF STRUCTURE. VERIFY DURING INSPECTION.

LEGEND

TAG	SYMBOL	DESCRIPTION
A/C		ABOVE CEILING
AHU		AIR HANDLER
BDD		BACKDRAFT DAMPER
B/F		BELOW FLOOR
CD		CEILING DIFFUSER
CWS&R		CONDENSER WATER SUPPLY & RETURN
CFM		CUBIC FOOT PER MIN.
DB		DRY BULB
		NEW DUCT WORK
EXIST.		EXISTING DUCT / PIPE
EAT		ENTERING AIR TEMPERATURE
EWT		ENTERING WATER TEMPERATURE
EF		EXHAUST FAN
ER		EXHAUST REGISTER
ESP		EXTERNAL STATIC PRESSURE
FD		FIRE DAMPER
F/SD		COMBINATION FIRE & SMOKE DAMPER
		VERTICAL FIRE DAMPER
		VERTICAL COMBINATION FIRE & SMOKE DAMPER
HP		HORSEPOWER
LAT		LEAVING AIR TEMPERATURE
LWT		LEAVING WATER TEMPERATURE
MD		MANUAL DAMPER
	M	MOTOR OPERATED DAMPER
OA		OUTSIDE AIR
RA		RETURN AIR
RAG		RETURN AIR GRILLE
SA		SUPPLY AIR
SR		SUPPLY REGISTER
	T	THERMOSTAT
		BALL VALVE
WSHP		WATER SOURCE HEAT PUMP

WESTSIDE ENGINEERING
WE # 24147
200 Galleria Parkway
Suite 1150
Atlanta, GA 30339
404-965-1287 tel
404-601-9859 fax
cesslinger@westside-engineering.com

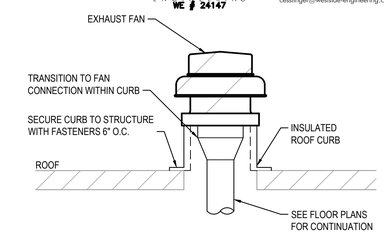

1 / M-001 ROOF MOUNTED FAN DETAIL
SCALE: N.T.S.

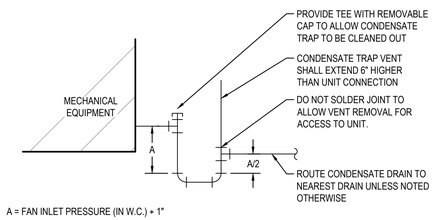

A = FAN INLET PRESSURE (IN W.C.) + 1"

2 / M-001 DRAW-THRU CONDENSATE TRAP DETAIL
SCALE: N.T.S.

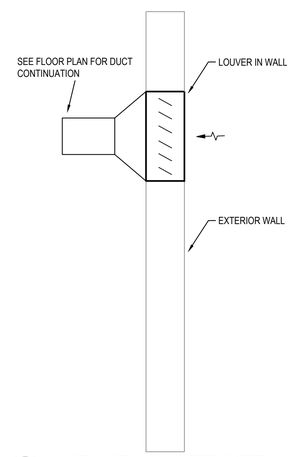

4 / M-001 INTAKE LOUVER DETAIL
SCALE: N.T.S.

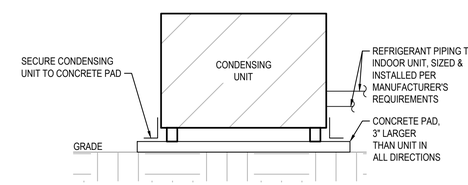

3 / M-001 CONDENSING UNIT ON GRADE DETAIL
SCALE: N.T.S.

HIGH VOLUME LOW SPEED FAN SCHEDULE

MARK	MANUFACTURER	MODEL	DIAMETER (FT)	TYPE	TYPE	RPM	POWER (HP)	WEIGHT (LBS)	VOLT	PHASE	REMARKS
HVLS-A	GREENHECK	DC-5-10	10	I-BEAM MOUNT	DIRECT DRIVE	46	1/4	140	120	1	1,2,3,4,5

NOTES:
(1) PROVIDE NON-FUSED DISCONNECT SWITCH OUTSIDE OF FAN RADIUS.
(2) PROVIDE WITH VARIABLE FREQUENCY DRIVE LOCATED OUTSIDE OF BLADE RADIUS FOR MAINTENANCE.
(3) LOCATE CONTROLLER 7'-0" AFF. COORDINATE FINAL LOCATION WITH CLIENT. INTERLOCK WITH FIRE PANEL FOR SHUTDOWN.
(4) PROVIDE WINGLETS.
(5) INSTALL PER MANUFACTURER'S RECOMMENDATION. ALLOW FOR A MINIMUM 2'-0" CLEARANCE ON ALL SIDES.

AIR DISTRIBUTION SCHEDULE

TAG	DESCRIPTION	BASIS OF DESIGN
SR	SUPPLY REGISTERS (SR) SHALL BE STEEL, DOUBLE DEFLECTION TYPE PROVIDED WITH OPPOSED BLADE DAMPER, OUTER MOST SET OF DEFLECTORS PARALLEL TO THE SHORT DIMENSION AND FACTORY APPLIED, WHITE, BAKED ENAMEL FINISH.	TITUS 300RS
ER	SURFACE MOUNT EXHAUST REGISTERS (ER) SHALL BE ALUMINUM WITH FIXED 35° DEFLECTION, BLADES PARALLEL TO THE LONG DIMENSION AND 3/4" BLADE SPACING. PROVIDE WITH OPPOSED BLADE BALANCING DAMPER AND WHITE, BAKED ENAMEL FINISH.	TITUS 350FL

DUCTLESS SPLIT SYSTEM SCHEDULE

TAG	SUPPLY AIRFLOW (CFM)	ESP (IN. W.C.)	MOTOR POWER (W)	OUTSIDE AIR (CFM)	COOLING						HEAT PUMP				VOLTAGE/PHASE		TYPE	BASIS OF DESIGN	NOTES
					TOTAL CAPACITY (MBH)	SENSIBLE CAPACITY (MBH)	EAT DB/WB (°F)	OUTDOOR TEMP DB (°F)	MIN. EER2	MIN. SEER2	TOTAL CAPACITY (MBH)	EAT DB (°F)	OUTDOOR TEMP DB (°F)	MIN. HSPF2	INDOOR UNIT (V/Ø)	OUTDOOR UNIT (V/Ø)			
DCU-1	--	--	74	--	24	18.48	80 / 67	95	12.6	19.5	24	68	47	9.5	240/1	240/1	CONDENSER	MITSUBISHI TRUZH0241HA10NA	
DCU-2	--	--	74	--	24	18.48	80 / 67	95	12.6	19.5	24	68	47	9.5	240/1	240/1	CONDENSER	MITSUBISHI TRUZH0241HA10NA	
DFC-1	375	--	30	--	12	10.56	80 / 67	95	13.3	21.3	12	68	47	10.2	240/1	240/1	WALL MOUNT	MITSUBISHI TPKA0A0121LA00A / DCU-1	1,2
DFC-2	375	--	30	--	12	10.56	80 / 67	95	13.3	21.3	12	68	47	10.2	240/1	240/1	WALL MOUNT	MITSUBISHI TPKA0A0121LA00A / DCU-1	1,2
DFC-3	375	--	30	--	12	10.56	80 / 67	95	13.3	21.3	12	68	47	10.2	240/1	240/1	WALL MOUNT	MITSUBISHI TPKA0A0121LA00A / DCU-1	1,2
DFC-4	375	--	30	--	12	10.56	80 / 67	95	13.3	21.3	12	68	47	10.2	240/1	240/1	WALL MOUNT	MITSUBISHI TPKA0A0121LA00A / DCU-1	1,2

NOTES:
(1) PROVIDE WITH 7-DAY PROGRAMMABLE THERMOSTAT. THERMOSTAT SHALL HAVE PROGRAMMABALE OCCUPANCY PERIODS TO ENERGIZE SUPPLY FAN DURING OCCUPIED PERIODS.
(2) PROVIDE 120 V CONDENSATE PUMP CAPABLE OF 1 GPH @ 5 FT. HD. LITTLE GIANT EC-1 OR EQUAL.

ELECTRIC HEATER SCHEDULE

TAG	AIRFLOW (CFM)	BLOWER MOTOR POWER (HP)	HEATING CAPACITY (KW)	STAGES	TYPE	VOLTS / PHASE (V/Ø)	BASIS OF DESIGN	NOTES
CH-A	--	--	1.5	1	CEILING	120/1	REDD-I 3000 SERIES	1
EWH-A	--	--	3	1	WALL	240/1	REDD-I AFH SERIES	2

NOTES:
(1) PROVIDE WITH RECESSED CEILING MOUNT, INTEGRAL DISCONNECT AND INTEGRAL THERMOSTAT.
(2) PROVIDE WITH SURFACE MOUNT ADAPTER WHERE INSTALLED ON CONCRETE WALL AND RECESS MOUNTING KIT WHERE INSTALLED IN FRAME WALL, INTEGRAL DISCONNECT, AND INTEGRAL TAMPER PROOF THERMOSTAT.

FAN SCHEDULE

TAG	AIRFLOW (CFM)	ESP (IN W.C.)	MOTOR POWER (HP)	FAN SPEED (RPM)	TYPE	DRIVE TYPE	NOISE (SONES)	VOLTS / PHASE (V/Ø)	BASIS OF DESIGN	NOTES
EF-1	875	0.5	1/4	1,616	ROOF	DIRECT	11.1	120/1	GREENHECK G-099-A	1,2,3
EF-2	600	0.5	1/4	1,597	ROOF	DIRECT	9.8	120/1	GREENHECK G-098-A	1,2,3

NOTES:
(1) PROVIDE WITH BACKDRAFT DAMPER AND SPEED CONTROLLER FOR BALANCING.
(2) FAN SHALL OPERATE ON A TIME CLOCK.
(3) PROVIDE 14" TALL ROOF CURB.

PRIME
A Stratus Team Company
3715 NORTHSIDE PARKWAY NW
BUILDING 800, SUITE 200
ATLANTA, GEORGIA 30327
404-425-7100

PROJECT:
DALTON PICKLEBALL COMPLEX
904 CIVIC DR, DALTON, GA 30721
PREPARED FOR:
CITY OF DALTON, GA

REVISIONS

NO.	DATE	DESCRIPTION

SEAL
GEORGIA REGISTERED PROFESSIONAL ENGINEER No 03549 JAMES DANIEL DONOVAN
DATE: 8/9/2024

© 2024 PRIME ENGINEERING, INC. Scales, as stated hereon, are valid on the original drawing: the dimensions of which are 24 by 36 inches. These scales, noted thereon, are hereby changed by the ratio of the overall sheet dimensions of the print to corresponding dimensions of the original drawing. This drawing is the property of PRIME ENGINEERING, INCORPORATED and is not to be reproduced or copied in whole or in part. It is only to be used for the project and site specifically identified herein and is not to be used on any other project. It is to be returned upon request.

DRAWING TITLE
LEGEND, NOTES, DETAILS & SCHEDULES

DRAWN BY GDL
DESIGNED BY GDL
CHECKED BY JDH
DRAWING DATE 8/9/2024
DRAWING SCALE AS INDICAITED
PROJECT NUMBER 2024-0283
DRAWING NUMBER M-001
ISSUED FOR CONSTRUCTION

D:\Westside Engineering Dropbox\Westside Engineering Team Folder\2024\24147 - Dalton Pickleball\Mech\M-001.dwg Thu, 08/08/24 8:09 AM

WESTSIDE ENGINEERING
WE # 24147
200 Galleria Parkway
Suite 1150
Atlanta, GA 30339
404-965-1287 tel
404-601-9859 fax
cesslinger@westside-engineering.com

KEY NOTES:

1. 14X12 EXHAUST DUCT UP TO ROOF MOUNTED EXHAUST FAN.
2. FIELD COORDINATE EXACT LOCATION OF CONDENSING UNIT.
3. INTAKE LOUVER SHALL BE 12" TALL AND 12" WIDE. BASIS OF DESIGN GREENHECK ESD-635. PROVIDE WITH BACKDRAFT DAMPER. PROVIDE FAUX GRILLES AS NEEDED.
4. 12X10 EXHAUST DUCT UP TO ROOF MOUNTED EXHAUST FAN.
5. HVLS-A SHALL BE MOUNTED OVER THE CENTER OF THE COURT.

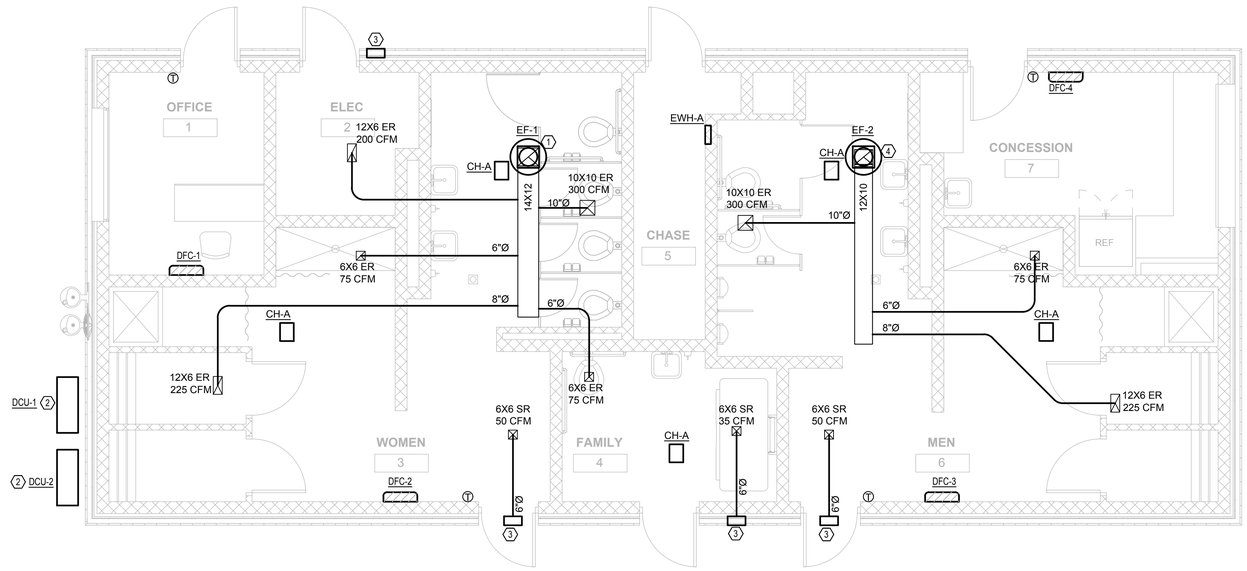

1 MECHANICAL PLAN
M-101 1/4" = 1'-0"

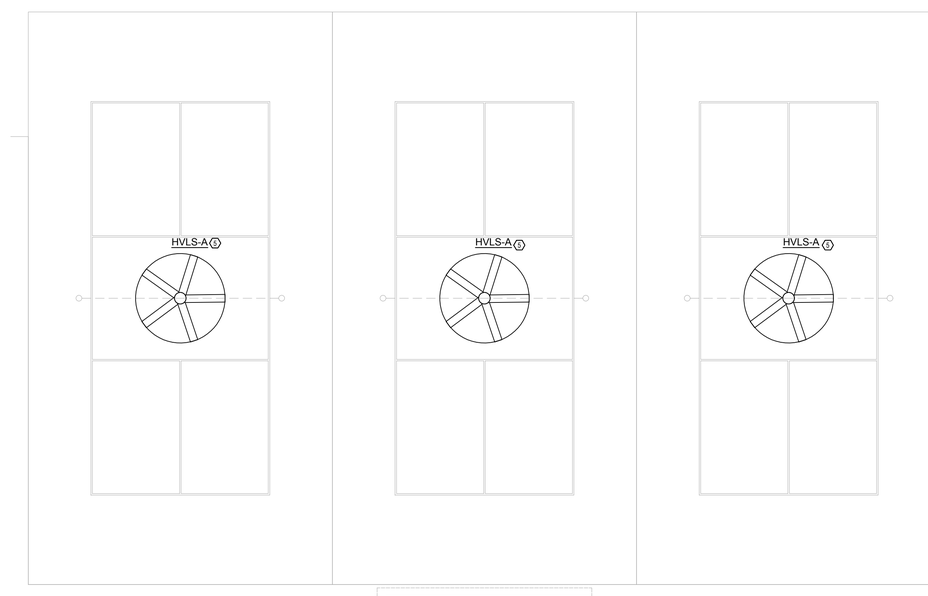

2 PICKLEBALL COURT MECHANICAL PLAN
M-101 1/4" = 1'-0"

PRIME
A Stratus Team Company
3715 NORTHSIDE PARKWAY NW
BUILDING 300, SUITE 200
ATLANTA, GEORGIA 30327
404-425-7100

PROJECT:
DALTON PICKLEBALL COMPLEX
904 CIVIC DR, DALTON, GA 30721

PREPARED FOR:
CITY OF DALTON, GA

REVISIONS

NO.	DATE	DESCRIPTION

SEAL
GEORGIA REGISTERED No 035449 PROFESSIONAL ENGINEER JAMES DANIEL HUBBARD
DATE: 8/9/2024

© 2024 PRIME ENGINEERING, INC.
Scales, as stated hereon, are valid on the original drawing; the dimensions of which are 24 by 36 inches. These scales, noted hereon, are thereby changed by the ratio of the overall sheet dimensions of the print to corresponding dimensions of the original drawing. This drawing is the property of PRIME ENGINEERING, INCORPORATED and is not to be reproduced or copied in whole or in part. It is only to be used for the project and site specifically identified herein and is not to be used on any other project. It is to be returned upon request.

DRAWING TITLE
MECHANICAL PLAN

DRAWING DATE 8/9/2024
DRAWN BY GDL
DRAWING SCALE AS INDICATED
DESIGNED BY GDL
PROJECT NUMBER 2024-0283
CHECKED BY JDH
DRAWING NUMBER M-101

ISSUED FOR CONSTRUCTION

D:\Westside Engineering Dropbox\Westside Engineering Team Folder\2024\24147 - Dalton Pickleball\Mech\M-101.dwg Thu, 08/08/24 8:06 AM

GENERAL NOTES (APPLY TO ALL SHEETS):

1. REFER TO ARCHITECTURAL DRAWINGS FOR EXACT FIXTURE MOUNTING HEIGHTS & LOCATIONS.
2. COORDINATE ALL SAN, VENT, CW, HW, ETC. WITH EXISTING CONDITIONS & ALL OTHER TRADES.
2. ALL SANITARY PIPING SHALL BE SLOPED AT 1/8" PER FOOT.
3. ALL PIPING SHALL BE PRESSURE TESTED PRIOR TO CONCEALING OR INSULATING THE PIPING.
4. MATERIALS EXPOSED IN RETURN AIR PLENUMS SHALL BE NON COMBUSTIBLE WITH A FLAME SPREAD INDEX NOT MORE THAN 25 AND A SMOKE DEVELOPED INDEX OF NOT MORE THAN 50.

LEGEND

TAG	SYMBOL	DESCRIPTION
A/C		ABOVE CEILING
AFF		ABOVE FINISHED FLOOR
AHU		AIR HANDLING UNIT
B/F		BELOW FLOOR
B/G		BELOW GRADE
CO		CLEAN OUT
CW		DOMESTIC COLD WATER
		CHECK VALVE
		NEW WORK
EXIST.		EXISTING PIPE / EQUIPMENT
FCU		FAN COIL UNIT
FCO		FLOOR CLEAN OUT
FD		FLOOR DRAIN
FDC		FIRE DEPARTMENT CONNECTION
FS		FLOOR SINK
FW		FILTERED WATER
HB		HOSE BIBB
HD		HUB DRAIN
HW		DOMESTIC HOT WATER
HWR		HOT WATER RETURN
NFWH		NON FREEZE WALL HYDRANT
SAN		SANITARY PIPING
ST		STORM PIPING
V		VENT PIPING
VTR		VENT THROUGH ROOF
		BALL VALVE
WCO		WALL CLEAN OUT
W		WASTE PIPING
WSHP		WATER SOURCE HEAT PUMP

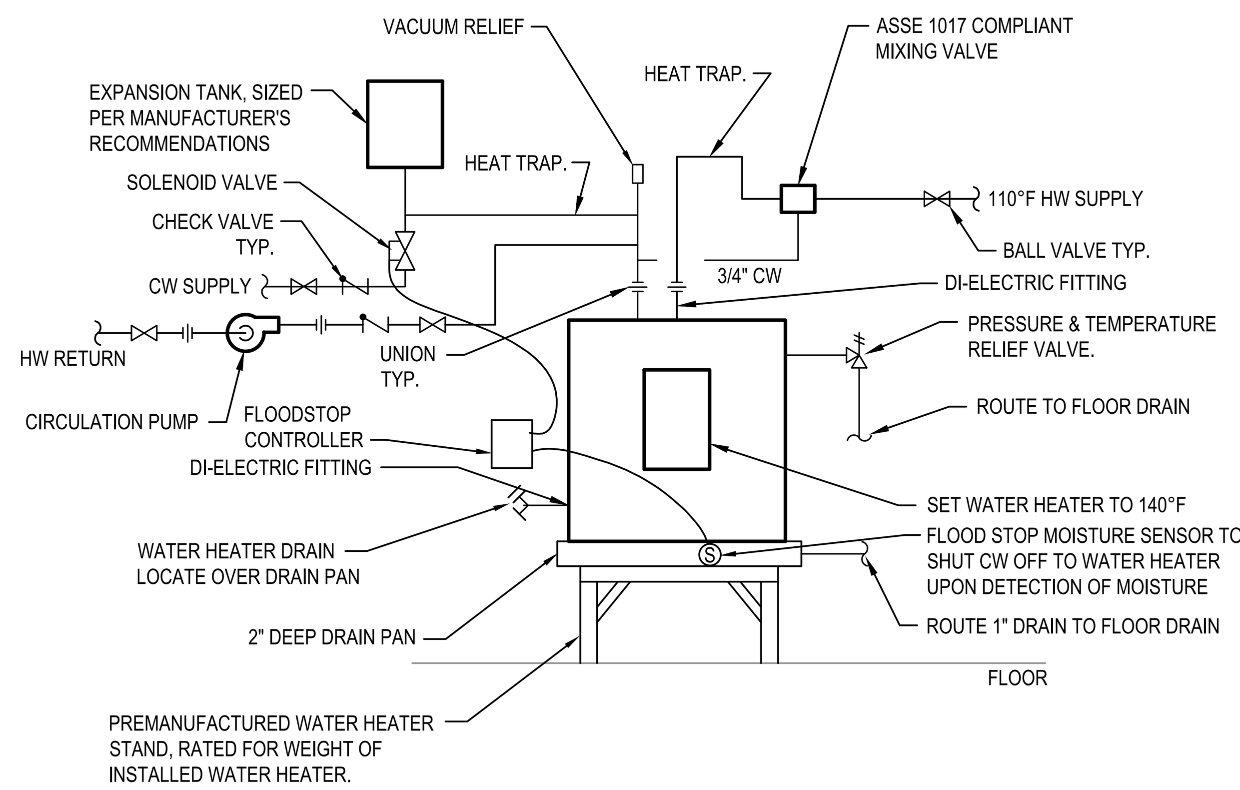

1 P-001 WATER HEATER DETAIL
SCALE: N.T.S. (WH-1)

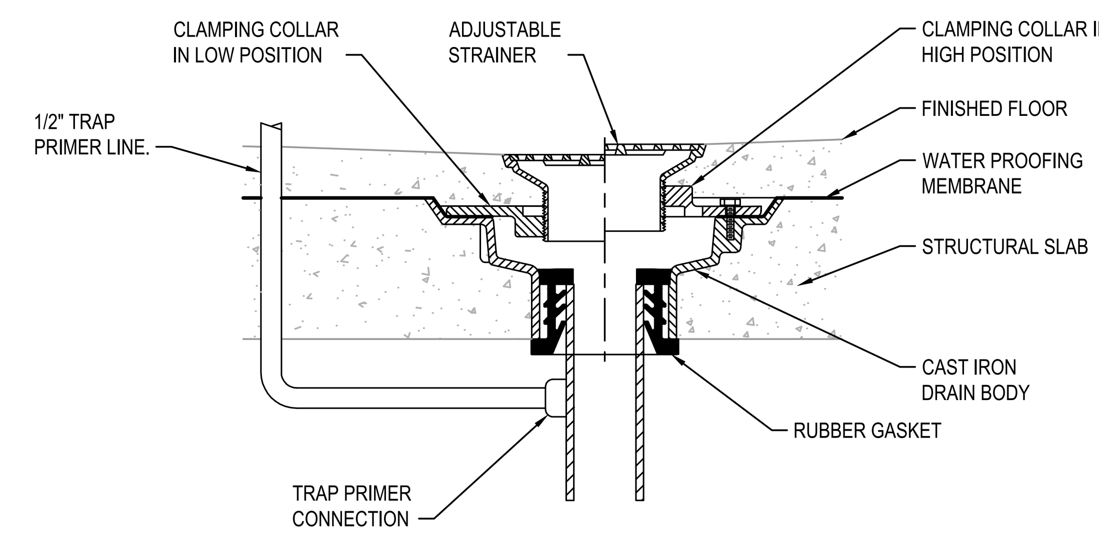

2 P-001 FLOOR DRAIN DETAIL
SCALE: N.T.S.

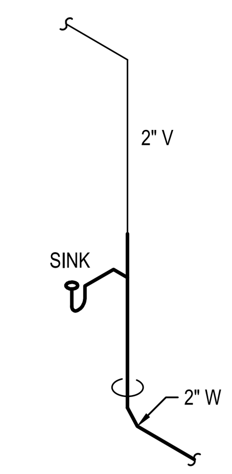

3 P-001 TYP. SINGLE SINK - SAN & VENT RISER
SCALE: N.T.S.

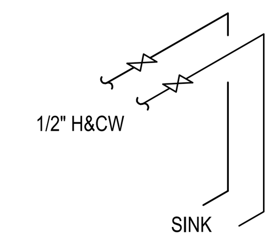

4 P-001 TYP. SINGLE SINK - DOMESTIC WATER RISER
SCALE: N.T.S.

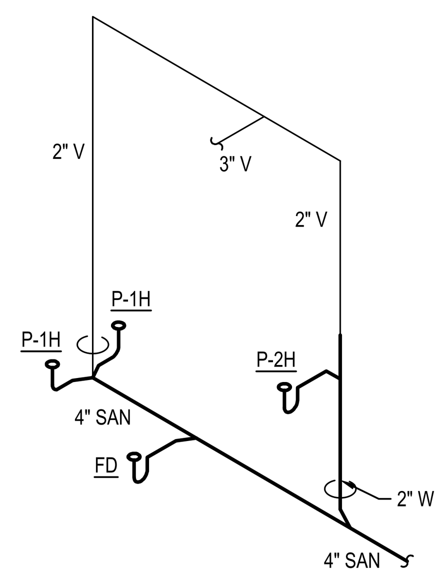

5 P-001 TYP. RESTROOM - SAN & VENT RISER
SCALE: N.T.S.

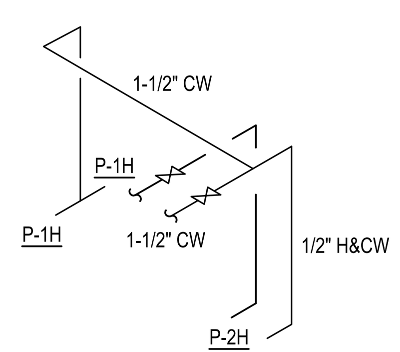

6 P-001 TYP. RESTROOM - DOMESTIC WATER RISER
SCALE: N.T.S.

ELECTRIC WATER HEATER SCHEDULE						
TAG	CAPACITY (GAL)	ELEMENT KW	RECOVERY RATE (GPH @ 90F)	VOLTS/ PHASE	BASIS OF DESIGN	NOTES
WH-1	80	9	41	240/1	AO SMITH DRE-80-9	1

NOTES:
(1) HEATER TO BE MOUNTED ON FLOOR. SEE DETAIL 1/P001.

PUMP SCHEDULE										
TAG	FLOW RATE (GPM)	HEAD (FT)	NPSHR (FT)	RPM	MOTOR HP	EFFICIENCY	VOLTS/ PHASE	PUMP TYPE	BASIS OF DESIGN	NOTES
HWRP-1	20	10	- -	2650	1/12	- -	120/1	INLINE	BELL & GOSSETT PL-30B	1,2

NOTES:
(1) ALL WETTED PUMP PARTS SHALL BE LEAD FREE.
(2) PROVIDE WITH REMOTE AQUASTAT & TIMER TO CYCLE PUMP ON AND OFF TO MAINTAIN HW LOOP TEMPERATURE DURING OCCUPIED HOURS.

PLUMBING FIXTURES & CONNECTION SCHEDULE						
TAG	FIXTURE	CW	HW	WASTE	VENT	FIXTURE SPECIFICATION
P-1	WATER CLOSET	1"	--	4"	2"	WHITE VITREOUS CHINA, WALL MOUNT, MOUNTED 15" A.F.F, ELONGATED BOWL WITH TOP SPUD, FLOOR MOUNTED FIXTURE CARRIER, BATTERY OPERATED HANDS FREE 1.28 GPF FLUSH VALVE, AND SOLID PLASTIC OPEN FRONT SEAT. BASIS OF DESIGN: KOHLER K-84325-0 BOWL, KOHLER K-4731-SC SEAT AND SLOAN G2 8111-1.28 FLUSH VALVE.
P-1H	ADA WATER CLOSET	1"	--	4"	2"	ADA COMPLIANT, WHITE VITREOUS CHINA, WALL MOUNT, MOUNTED 17" A.F.F, ELONGATED BOWL WITH TOP SPUD, FLOOR MOUNTED FIXTURE CARRIER, BATTERY OPERATED HANDS FREE 1.28 GPF FLUSH VALVE, AND SOLID PLASTIC OPEN FRONT SEAT. BASIS OF DESIGN: KOHLER K-84325-0 BOWL, KOHLER K-4731-SC SEAT AND SLOAN G2 8111-1.28 FLUSH VALVE.
P-2H	ADA LAVATORY - WALL HUNG	1/2"	1/2"	2"	2"	ADA COMPLIANT, DURAVIT STARCK 3, 23-5/8" RECTANGULAR CERAMIC WALL MOUNTED LAVATORY WITH GRID STRAINER, TAIL PIECE, OFFSET P-TRAP, SERVICE STOPS, ADA INSULATION KIT, OVERFLOW AND 1 FAUCET HOLES, 1.2 GPM, SOLID BRASS,HARD WIRED OPERATED HANDS FREE FAUCET SINGLE HOLE PUNCHING. BASIS OF DESIGN: DURAVIT MODEL: 0309600000 SINK, AND KOHLER TOUCHLESS K-R32930-AD-CP FAUCET, AND WALL MOUNT SOAP DISPENSER KOHLER K-22848-CP COMPOSED TOUCHLESS FOARMING SOAP DISPENSER, AC-POWERED.
P-3	URINAL	3/4"	--	2"	2"	ADA COMPLIANT, WHITE VITREOUS CHINA, WALL MOUNT, WITH TOP SPUD, FLOOR MOUNTED FIXTURE CARRIER AND BATTERY OPERATED HANDS FREE 0.125 GPF FLUSH VALVE. BASIS OF DESIGN: KOHLER K-5452-ET AND SLOAN 8186-0.125 FLUSH VALVE
P-4	DRINKING FOUNTAIN WITH BOTTLE FILLER	1/2"	- -	2"	2"	ADA COMPLIANT, BARRIER FREE, HANDS FREE OUTDOOR ezH2O UPPER BOTTLE FILLING STATION TRI-LEVEL PEDESTAL NON-FILTERED NON-REFERIGERATED SHALL PRODUCE 8.0 GPH OF 50F WATER AT 90F AMBIENT TEMPERATURE. BASIS OF DESIGN: ELKAY LK4430BF1U.
P-5	SHOWER	1/2"	1/2"	2"	2"	TILE SHOWER WITH 1.5 GPM SHOWER HEAD SET & VALVE. VALVE SHALL PRESSURE BALANCING, ANTI SCALD TYPE WITH HOT LIMIT SAFETY STOP AND DIVERTER VALVE. BASIS OF DESIGN:AMERICAN STANDARD "RELIANT 3" T385.501.002 HEAD SET AND R120SS VALVE.
P-5H	ADA SHOWER	1/2"	1/2"	2"	2"	ADA TILE SHOWER WITH 1.75 GPM CHROME PLATED ADA SHOWER HEAD SET, SHOWER ARM WITH DIVERTER VALVE, 30" SLIDE BAR, HANDHELD SHOWER HEAD WITH 60" HOSE & SHOWER VALVE. VALVE SHALL PRESSURE BALANCING, ANTI SCALD TYPE WITH HOT LIMIT SAFETY STOP. BASIS OF DESIGN: KOHLER; TRIM #TS8981-4CP; VALVE #P8304-KS-NA; HAND SHOWER KIT #22178-G-CP; SUPPLY ELBOW #22172-CP.
P-6	ICEMAKER BOX	1/2"	- -	- -	- -	PROVIDE ICEMAKER BOX WITH TRIM RING AND 1/4 TURN SHUT OFF VALVE. BASIS OF DESIGN IS OATEY 39134.
NFWH	NON-FREEZE WALL HYDRANT	3/4"	--	--	--	LOOSE KEY HOSE BIBB WITH NICKLE PLATED BRASS BOX AND VACUUM BREAKER. BASIS OF DESIGN: WOODFORD B65.
FD-1	FLOOR DRAIN - MECHANICAL ROOM	1/2" TP	--	4"	2"	FLOOR DRAINS IN MECHANICAL ROOMS SHALL HAVE 11-3/4" ROUND CAST IRON GRATE, SEDIMENT BUCKET AND DEEP SEAL P-TRAP. BASIS OF DESIGN: JR SMITH 2131 SERIES. PROVIDE WITH TRAP PRIMER
FD	FLOOR DRAIN	1/2" TP	--	2"	2"	FLOOR DRAINS IN FINISHED AREAS SHALL HAVE 6" SQUARE ADJUSTABLE, VANDAL PROOF STRAINER IN NICKLE BRONZE FINISH. BASIS OF DESIGN: JR SMITH 2000 SERIES. PROVIDE WITH TRAP PRIMER

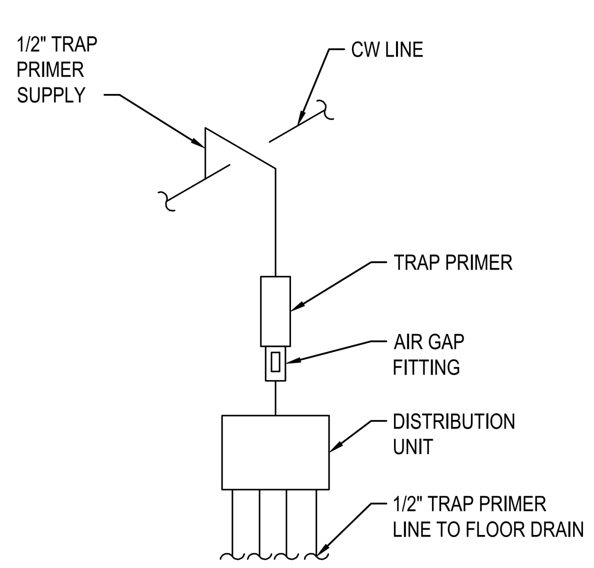

7 P-001 TRAP PRIMER DETAIL
SCALE: N.T.S.

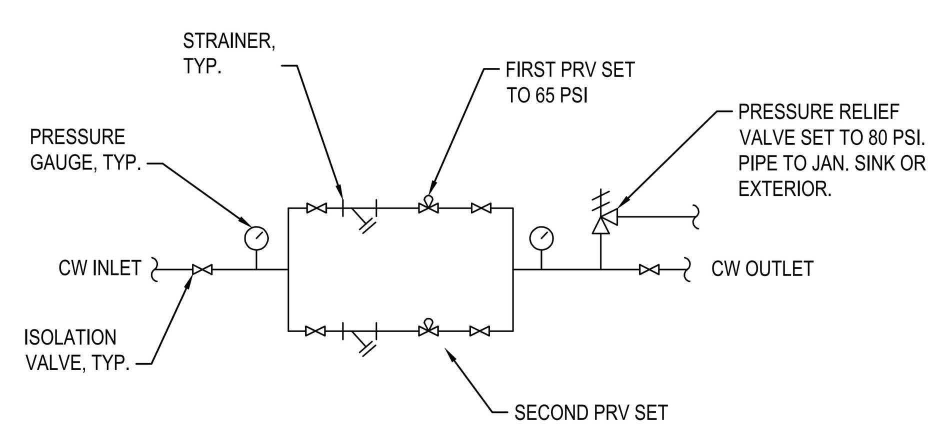

PRV SIZING:
2" OR SMALLER WATER LINE - INSTALL (1) LINE SIZE PRV
2-1/2" WATER LINE - INSTALL (2) 1-1/2" PRVs
3" WATER LINE - INSTALL (2) 2" PRVs
4" WATER LINE - INSTALL (3) 2" PRVs

8 P-001 PRV DETAIL
SCALE: N.T.S.

WESTSIDE ENGINEERING WE # 24147
200 Galleria Parkway
Suite 1150
Atlanta, GA 30339
404-965-1287 tel
404-601-9859 fax
cesslinger@westside-engineering.com

PRIME
A Stratus Team Company
3715 NORTHSIDE PARKWAY NW
BUILDING 300, SUITE 200
ATLANTA, GEORGIA 30327
4 0 4 - 4 2 5 - 7 1 0 0

PROJECT:
DALTON PICKLEBALL COMPLEX
904 CIVIC DR, DALTON, GA 30721
PREPARED FOR:
CITY OF DALTON, GA

REVISIONS		
NO.	DATE	DESCRIPTION

SEAL
GEORGIA REGISTERED PROFESSIONAL ENGINEER No 035640 JAMES DANIEL HUBBARTT
DATE: 8/9/2024

© 2024 PRIME ENGINEERING, INC. Scales, as stated hereon, are valid on the original drawing; the dimensions of which are 24 by 36 inches. These scales, noted hereon, are hereby changed by the ratio of the overall sheet dimensions of the print to corresponding dimensions of the original drawing. This drawing is the property of PRIME ENGINEERING, INCORPORATED and is not to be reproduced or copied in whole or in part. It is only to be used for the project and site specifically identified herein and is not to be used on any other project. It is to be returned upon request.

DRAWING TITLE
LEGEND. NOTES, DETAILS & SCHEDULES

DRAWING DATE 8/9/2024	DRAWN BY HL
DRAWING SCALE AS INDICATED	DESIGNED BY HL
PROJECT NUMBER 2024-0283	CHECKED BY JDH
DRAWING NUMBER P-001	

ISSUED FOR CONSTRUCTION

C:\Users\Me\Westside Engineering Dropbox\Westside Engineering Team Folder\2024\24147 - Dalton Pickleball\Plumb\P001.dwg Fri, 08/09/24 8:57 AM

WESTSIDE ENGINEERING
WE # 24147
200 Galleria Parkway
Suite 1150
Atlanta, GA 30339
404-965-1287 tel
404-601-9859 fax
cesslinger@westside-engineering.com

PRIME
A Stratus Team Company
3715 NORTHSIDE PARKWAY NW
BUILDING 300, SUITE 200
ATLANTA, GEORGIA 30327
404-425-7100

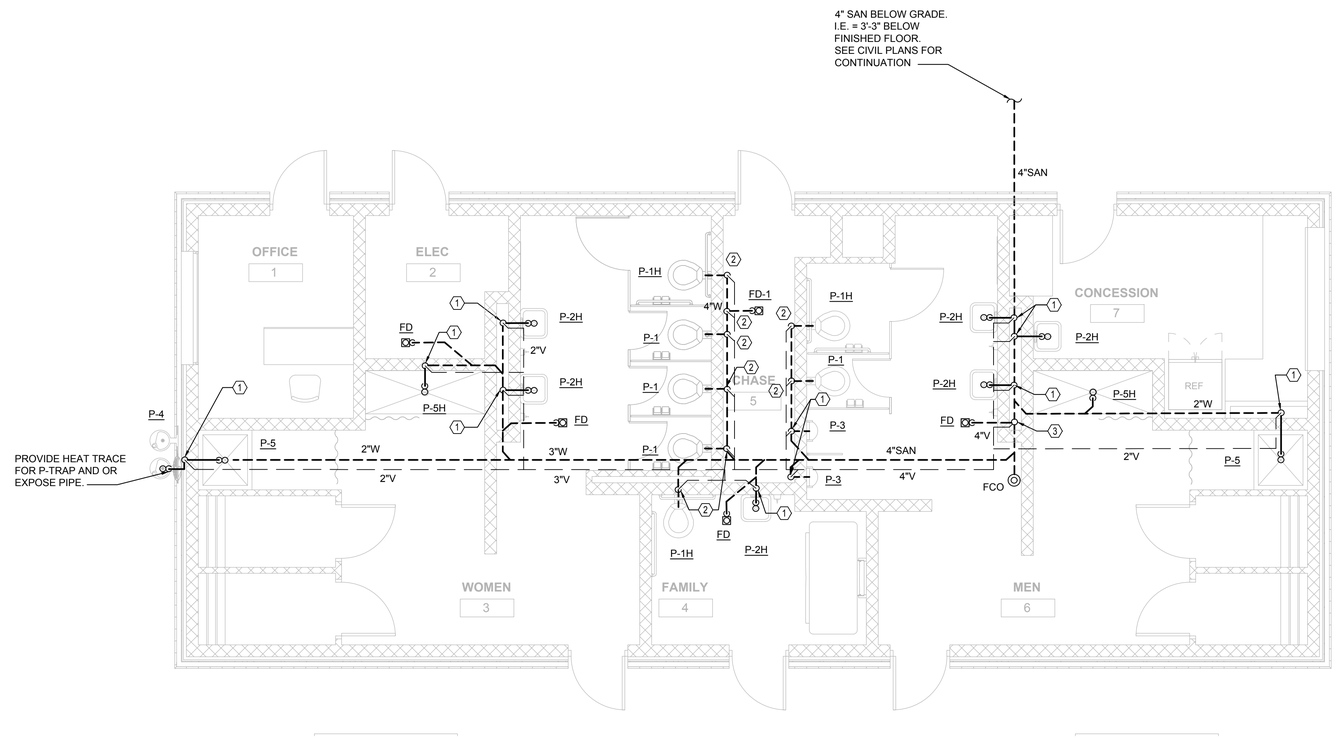

1 P-101 **PLUMBING FLOOR PLAN - SAN & VENT**
1/4" = 1'-0"

KEY NOTES:

1. 2" W, 2" V.
2. 4" W & 2"V.
3. 3" W DN AND 2" V UP TO 4" VTR.

PROJECT:
DALTON PICKLEBALL COMPLEX
904 CIVIC DR, DALTON, GA 30721

PREPARED FOR:
CITY OF DALTON, GA

REVISIONS

NO.	DATE	DESCRIPTION

SEAL

GEORGIA REGISTERED PROFESSIONAL ENGINEER No 035440 HARRY JAMES DANIEL

DATE: 8/9/2024

© 2024 PRIME ENGINEERING, INC.
Scales, as stated hereon, are valid on the original drawing; the dimensions of which are 24 by 36 inches. These scales, noted hereon, are invalid if changed by the reproduction process or by the ratio of the overall sheet dimensions of the print to corresponding dimensions of the original drawing. This drawing is the property of PRIME ENGINEERING, INCORPORATED and is not to be reproduced or copied in whole or in part. It is only to be used for the project and site specifically identified herein and is not to be used on any other project. It is to be returned upon request.

DRAWING TITLE
PLUMBING FLOOR PLAN - SAN & VENT

DRAWING DATE 8/9/2024	DRAWN BY HL
DRAWING SCALE AS INDICATED	DESIGNED BY HL
PROJECT NUMBER 2024-0283	CHECKED BY JDH
DRAWING NUMBER **P-101**	ISSUED FOR CONSTRUCTION

C:\Users\Ale\Westside Engineering Dropbox\Westside Engineering Team Folder\2024\24147 - Dalton Pickleball\Plumb\P101.dwg Fri, 08/09/24 8:58 AM

WESTSIDE ENGINEERING
WE # 24147
200 Galleria Parkway
Suite 1150
Atlanta, GA 30339
404-965-1287 tel
404-601-9859 fax
cesslinger@westside-engineering.com

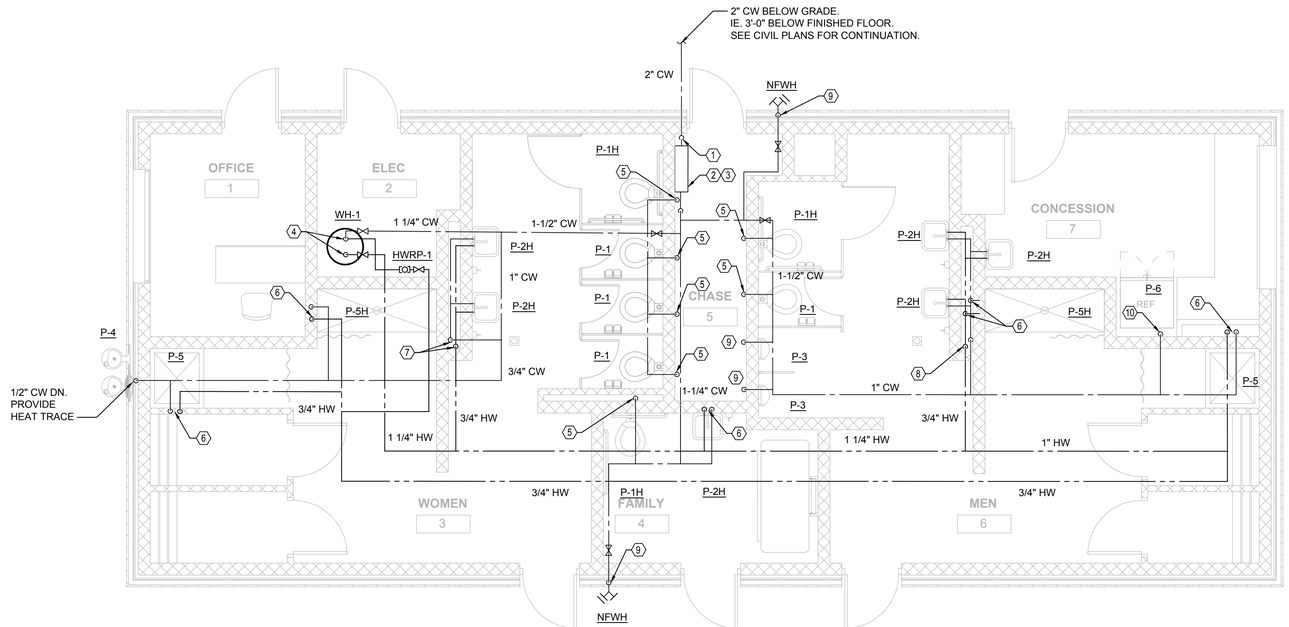

1 PLUMBING FLOOR PLAN - DOM WATER
P-201 1/4" = 1'-0"

KEY NOTES:

1. 2" CW DN TO BELOW FLOOR.
2. BACKFLOW PREVENTER SHALL BE LEAD FREE, REDUCED PRESSURE ZONE ASSEMBLY (RPZA), WATTS LF909 OR EQUAL.
3. INSTALL PRV STATION ON WALL ABOVE BACKFLOW PREVENTER. REFER TO DETAIL 8/P001.
4. 1 1/4" H&CW DN TO WH-1.
5. 1" CW DN.
6. 1/2" H&CW DN.
7. 3/4" H&CW DN AND ROUTE 1/2" H&CW TO EACH LAVATORY STUB OUT.
8. 1" H&CW DN AND ROUTE 1/2" H&CW TO EACH LAVATORY, SINK AND SHOWER.
9. 3/4" CW DN.
10. 1/2" CW DN.

PRIME
A Stratus Team Company
3715 NORTHSIDE PARKWAY NW
BUILDING 300, SUITE 200
ATLANTA, GEORGIA 30327
404-425-7100

PROJECT:
DALTON PICKLEBALL COMPLEX
904 CIVIC DR, DALTON, GA 30721

PREPARED FOR:
CITY OF DALTON, GA

REVISIONS

NO.	DATE	DESCRIPTION

SEAL
GEORGIA REGISTERED PROFESSIONAL ENGINEER No 035440 JAMES DANIEL HUBBARD
DATE: 8/9/2024

© 2024 PRIME ENGINEERING, INC.
Scales, as stated hereon, are valid on the original drawing; the dimensions of which are 24 by 36 inches. These scales, ratio of the overall sheet dimensions of the print to corresponding dimensions of the original drawing. This drawing is the property of PRIME ENGINEERING, INCORPORATED and is not to be reproduced or copied in whole or in part. It is only to be used for the project and site specifically identified herein and is not to be used on any other project. It is to be returned upon request.

DRAWING TITLE
PLUMBING FLOOR PLAN - DOM WATER

DRAWING DATE 8/9/2024	DRAWN BY HL
DRAWING SCALE AS INDICATED	DESIGNED BY HL
PROJECT NUMBER 2024-0283	CHECKED BY JDH
DRAWING NUMBER P-201	

ISSUED FOR CONSTRUCTION

C:\Users\Mk\Westside Engineering Dropbox\Westside Engineering Team Folder\2024\24147 – Dalton Pickleball\Plumb\P201.dwg Fri, 08/09/24 9:00 AM